USATSG LIBRARY
FILE COPY

MANUAL M8625349
31 January 1963

OPERATOR'S AND MAINTENANCE MANUAL

FOR

TEST SET, TRANSISTOR AN/USM-136

Part Number 8625349

United States Army Munitions Command
Frankford Arsenal
Philadelphia 37, Penna.

Prepared by

AMERICAN ELECTRONIC LABORATORIES, INC.
Richardson Road, Colmar, Penna.

Contract DA-36-034-ORD-3371A

31 January 1963

WARNING

Voltages as high as 505 Volts are used in the operation of this equipment.

Do not touch or come in contact with the DIODE test clips during automatic stepping or while the RECHECK button is held in.

M8625349

TABLE OF CONTENTS

	Page
CHAPTER 1 INTRODUCTION	1
Section I GENERAL	1
1. Scope	1
2. Maintenance Allocation	2
3. Forms, Records, and Reports	2
Section II DESCRIPTION AND DATA	3
4. Description	3
5. Nameplate and Test Routine Plate	5
6. Technical Characteristics	5
7. Packaging Data	7
8. Table of Components	8
9. Description of Test Set, Transistor TV-14/U	9
10. Running Spares	11
CHAPTER 2 OPERATING INSTRUCTIONS	12
Section I SERVICE UPON RECEIPT OF EQUIPMENT	12
11. Purpose	12
12. Uncrating, Unpacking and Checking New Equipment	12
13. Inspecting New Equipment	13
14. Service Upon Receipt of Used or Reconditioned Equipment	15
Section II CONTROLS AND INDICATORS	16
15. Controls and Indicators and Their Use	16
16. Use of Accessory Equipment	20
Section III OPERATION UNDER USUAL CONDITIONS	23
17. General	23
18. Preliminary Starting Procedure	23
19. Operation	29
a. Starting	29
b. Out-of-Circuit Testing	29
c. In-Circuit Checking	34
d. Stopping	38

Digitized by the Internet Archive
in 2025

https://archive.org/details/manualsplus_05954

Page

Section IV OPERATION OF MATERIAL USED IN CONJUNCTION WITH THE TEST SET 38

20. Thermoelectric Module 38

Section V OPERATION UNDER UNUSUAL CONDITIONS 40

21. General 40

22. Operation in Extreme Cold-Weather Conditions 41

23. Operation in Extreme Hot-Weather Conditions 41

CHAPTER 3 OPERATOR AND ORGANIZATIONAL MAINTENANCE INSTRUCTIONS 42

Section I REPAIR PARTS, TOOLS AND EQUIPMENT 42

24. General 42

25. Repair Parts 42

26. Common Tools and Equipment 42

27. Special Tools and Equipment 42

Section II LUBRICATION 43

28. Lubrication Instructions 43

Section III PREVENTIVE-MAINTENANCE SERVICES 43

29. General 43

30. Cleaning 44

31. Performing Preventive Maintenance 45

Section IV TROUBLESHOOTING 48

32. Purpose 48

33. Scope 49

34. Procedure 49

Section V WEATHERPROOFING 51

35. Weatherproofing 51

36. Rustproofing and Painting 51

CHAPTER 4 FIELD AND DEPOT MAINTENANCE INSTRUCTIONS 52

Section I PREREPAIR PROCEDURES 52

37. Tools, Materials and Test Equipment 52

38. Removal of Pluck-Out Parts 53

39. Cleaning, Inspecting and Testing Removed Parts 53

40. Cleaning and Inspecting Chassis Assembly 54

41. Reassembling the Test Set 54

Page

Section II TROUBLE SHOOTING AT FIELD AND DEPOT MAINTENANCE LEVELS 54

42. Trouble-Shooting Procedures 54

43. Trouble-Shooting Data 56

44. Test Equipment Required for Trouble Shooting 56

45. Precautions 58

46. Power Supply Resistance Measurements 58

47. Other Resistance Measurements 60

48. Operational Test 64

49. Troubleshooting Chart 78

Section III LUBRICATION AND PAINTING 79

50. Lubrication 79

51. Painting 79

Section IV CALIBRATION 79

52. General 79

53. Test Equipment Required for Complete Calibration 80

54. Regulated 1 ma Current Supply, A300 83

55. Programmed 0.25 to 50 Volt Power Supply, A1600 83

56. Fixed High Voltage Supply +225 Volts, A1400 85

57. Programmed High Voltage Supply, A1500 86

58. Regulated Current Supply, A1900 87

59. Plus or Minus 24 Volt Service Supply, A1700 89

60. Supplementary Power Supply, A1800 90

61. Readout Converter, A400 91

62. Comparison Converter, A1000 94

63. Scaling Amplifier, A900 97

64. h_{fe} Base Drive Circuit, A500 99

65. h_{FE} (pulse) Base Drive Circuit, A600 100

66. Readout Counter, A1100 101

67. Light Driver, A1200 102

68. Final Checking 103

Section V REPAIRS 103

69. General 103

70. Indicator Lamp Replacement 103

Page

71. Removal and Replacement of the Automatic Lead Selector 105

72. Removal and Replacement of the h_{fe} Base Drive Module 106

Section VI THEORY OF TEST SET AN/USM-136 106

73. Block Diagram 106

74. Automatic Lead Selector - In-Circuit Checker Module 108

CHAPTER 5 SHIPMENT AND LIMITED STORAGE AND DEMOLITION TO PREVENT ENEMY USE

75. Repacking for Shipment or Storage

76. Demolition

CHAPTER 1

INTRODUCTION

Section I GENERAL

1. Scope

a. This technical manual contains instructions on operation and maintenance of the Transistor Test Set AN/USM-136 for the operator and instructions for organizational maintenance of the Transistor Test Set AN/USM-136 by personnel of the using organization. Field and Depot Maintenance is also covered.

b. Appendix I contains a list of current references including available publications applicable to the Transistor Test Set AN/USM-136.

c. Appendix II contains Lubrication Instructions for Stepping Switches K1313 and K102.

d. Appendix III contains all of the Schematic Diagrams for the AN/USM-136.

e. Appendix IV contains the Schematics of test circuits for the plug-in subassemblies for the AN/USM-136.

f. Appendix V contains the Programming Punched Cards, Instructions for. Also, sample programming data sheets.

g. Appendix VI contains a copy of all the prepunched program cards supplied with the AN/USM-136.

h. Appendix VII contains a complete technical description of the Automatic Lead Selector - In-Circuit Checker Module.

i. This first edition is being published in advance of a complete technical review. Any errors or omissions will be brought to the attention of the Commanding Officer, United States Army Munitions Command, Frankford Arsenal, Philadelphia 37, Pennsylvania, Attention: SMUFA-5500, H. Gatter.

2. Maintenance Allocation

a. Operator and Organization Maintenance Allocation. The prescribed maintenance to be performed by the operator and organization will apply as reflected in the chapter on Operator and Organization Maintenance Allocation (first and second echelon), Chapter 3 of this manual. In all cases, where the nature of the repair, modification, or adjustment and calibration is beyond the scope or facilities of the operator or organizational maintenance personnel then the equipment should be returned to field or depot so that trained personnel with suitable tools and equipment may be provided.

b. Field and Depot Maintenance Allocation. The prescribed maintenance to be performed by maintenance personnel of the field or depot will apply as reflected in the chapter on field or depot maintenance (third, fourth, and fifth echelon), Chapter 4 of this manual. In all cases, where the nature of the repair, modification, or adjustment is beyond the scope or facilities of the using organization, the supporting ordnance maintenance unit should be informed so that trained personnel with suitable tools and equipment may be provided or other instructions issued.

3. Forms, Records, and Reports

a. General. Responsibility for the proper execution of forms, records, and reports rests upon the officers of all units maintaining this equipment. However, the value of accurate records must be fully appreciated by all persons responsible for their compilation, maintenance, and use. Records, reports, and authorized forms are normally utilized to indicate the type, quantity, and condition of material to be inspected, to be repaired, or to be used in repair. Properly executed forms convey authorization and serve as records for repair or replacement of material in the hands of troops and

for delivery of material requiring further repair to ordnance shops in arsenals, depots, etc. The forms, records, and reports establish the work required, the progress of the work within the shops, and the status of the material upon completion of its repair.

b. Report of Unsatisfactory Equipment and Materials. Any deficiencies detected in the equipment covered herein should be immediately reported in accordance with the applicable instructions.

Section II DESCRIPTION AND DATA

4. Description.

a. Test Set, Transistor AN/USM-136 (Figure 1) includes the test set TV-14/U which will hereinafter be called the test set; and the accessory case MK-648/USM-136. The test set is a portable unit which will check transistors and diodes in-circuit, and test transistors, diodes and other 2, 3, and 4-terminal semiconductors out-of-circuit.

b. The transistor test set is designed primarily for field and depot use in making precise measurements of the semiconductors used in electronic equipment. Digital readout of measured test data and acceptance limits along with GO, NO-GO indication is provided.

c. Punched-card programming of power supplies, test circuits, test conditions, and High and Low acceptance limits is used to simplify operation. The transistor test set is supplied with 450 prepunched program cards for various semiconductors and a supply of spare blank cards, a punch and punching instruction in this manual for programming either new semiconductors, or special and unique test specifications.

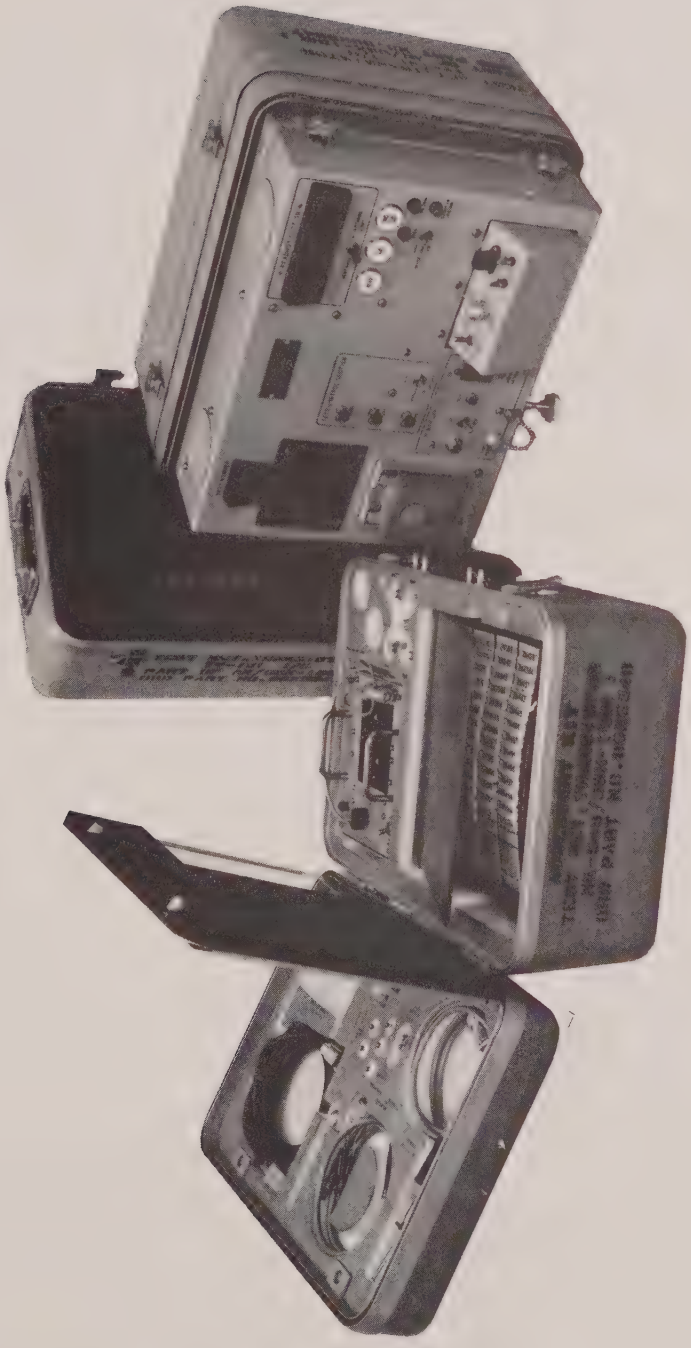

Figure 1. Test Set, Transistor AN/USM-136

d. An automatic lead selector is provided in the transistor so that no prior knowledge of lead orientation is required for most semiconductors for out-of-circuit tests. In-circuit checks are completely automatic since no circuit data or lead orientation knowledge is required.

5. Nameplate and Test Routine-Plate

a. The nameplate, Figure 2, is located on the front panel at the top-center. The nameplate contains the nomenclature and designator for the Transistor Test Set, the serial number, contract number and name of manufacturer.

b. The Test Routine plate, Figure 2, is located on the front panel at the left edge. The Test Routine plate tabulates the twelve (12) test positions vs. what type of test is performed for diodes, transistors and other semiconductor types.

6. Technical Characteristics

Beta measurement.....	5 to 990
GO, NO-GO comparator accuracy..	±2 percent
Programmable Voltage Supplies..	0.25 to 50 volts ±3 percent in 32 variable spaced increments at 1 amp maximum.
	50 to 505 volts ±3 percent in 64 variable spaced increments at 20 milliamperes maximum (50 milliamperes maximum to 280 volts).
Programmable Current Supply....	0.25 to 50 milliamperes ±2 percent in 24 variable spaced increments at voltages up to 50 volts maximum.

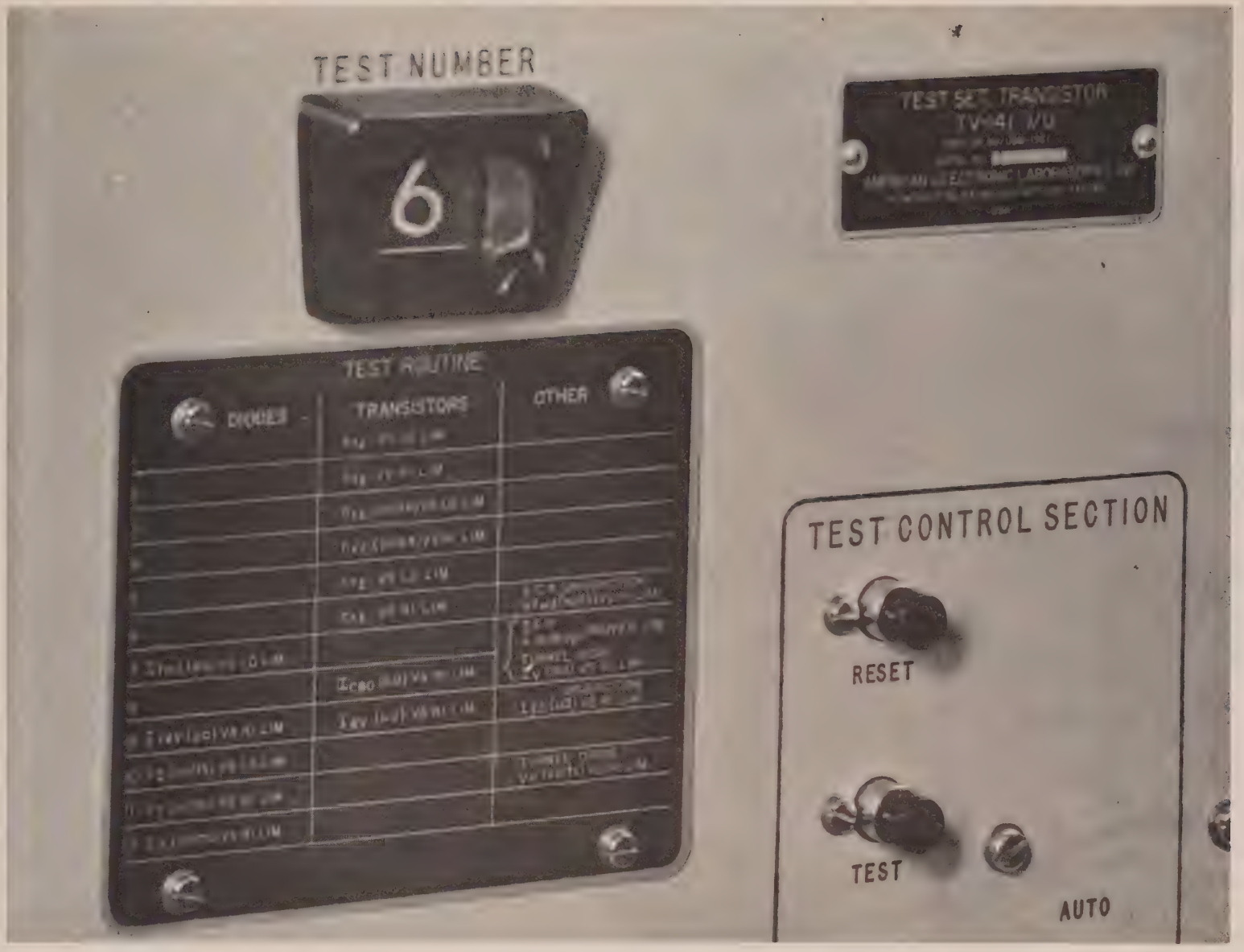

Figure 2. Nameplate and Test Routine Plate

Programmable Acceptance Limits	99 increments (01 through 99)
Digital Projection Readout Accuracy.....	±1 percent ± one count, full scale; two significant figures, four place programmed movable decimal point.
In-Circuit Checks of Transistors and Diodes	with shunts as low as 250 ohms for germanium and 500 ohms for silicon devices.
Punched Card Programs Test Circuits for.....	
Transistors.....	h_{fe}, h_{FE}, pulse h_{FE}, I_{cbo}, I_{bv}
Diodes.....	I_{fwd}, I_{rev}
Zeners.....	V_z, Z_z
Others.....	V_{fwd}, $I_{leakage}$, I_{valley}, V_{peak}, I_{EO}
Input Voltage.....	115 or 230 volts ±10 percent
Input Frequency.....	60 or 400 cps ±10 percent
Input Power.....	130 watts
Weight of Test Set TV-14/U.....	95 lbs.

7. Packaging Data

a. Test Set, Transistor AN/USM-136 is packaged in a moisture proof reusable shipping container. The packed equipment weighs approximately 176 lbs. and displaces 14.5 cubic feet.

b. The following table indicates the contents of the shipping case. See the packing list attached to each case for the exact contents.

TABLE 1

Contents	Notes
1 - Test Set, Transistor TV-14/U	
1 - Accessory Case MK-648/USM-136	Includes Assorted Parts

8. Table of Components

TABLE 2

Component	Ord. Part Number	Req'd No.	Height (Inches)	Depth (Inches)	Length (Inches)	Volume (Cu. Ft.)	Unit Weight (Lb.)
Test Set, Transistor TV-14/U	8625347	1	16.2	17.9	20.2	2.3	93
Accessory Case MK-648/USM-136	8625348	1	14.8	10.4	20.1	1.6	18
Power Cord	8588147	1			96		
In-Circuit Probe	8625490	1			72		.7
Clip-Lead Adapter	8625521	1			48		
Temperature Regulator	8625556	1	7.3	6.0	9.0	.3	6
Component Adapter	8625557	1					
Card Punch	8625592	1					
Punched Program Cards	8625444	450	11.5	1.8	10.5		2

8. Table of Components (Continued)

TABLE 2 (Continued)

Component	Ord. Part Number	Req'd No.	Height (Inches)	Depth (Inches)	Length (Inches)	Volume (Cu. Ft.)	Unit Weight (Lb.)
Set of Running Spares	as listed on 8625348	1					
Instruction Manual for Test Set, Transistor AN/USM-136	8625349	2	11.5	1.0	10.5		1
Spare Program Cards	8625444	55					
Inspection Test Cards	8625444	7					

9. Description of Test Set, Transistor TV-14/U

a. The test set consists of a unique panel-chassis assembly contained in a fiberglas transit case. The front of the case, removable for operation, is equipped with two carrying handles and a set of protective feet. The rear half of the case is never removed except for calibration or repair. Ventilating louvers are located along the top and bottom edge, just to the rear of the front panel. The AC (alternating current) power cord is plugged into the lower left side just to the rear of the front panel.

b. All of the operating controls of the test set are mounted on the front panel. Calibration and alignment controls are only accessible by removing the rear cover.

CAUTION

Do not adjust any of the rear controls without consulting the section in Chapter 4 of this manual dealing with calibration.

When mounted ready for operation, a center-front leg is used in conjunction with the two rear cover protective feet to provide tip-free mounting on uneven surfaces.

c. Access to the rear of the front panel for replacement of the projection bulbs is available by turning the two latches along the right side just to the rear of the front panel and swinging the front panel outwards on its hinge, as when opening a book.

d. The following components are supplied with the Test Set, Transistor AN/USM-136 and are located in the Accessory Case, MK-640/USM-136.

(1) Power cord, part number 8588147: consists of an 8 ft. length of two wire plus ground lead line cord terminated at each end with appropriate connectors.

(2) In-Circuit Probe, part number 8625490: consists of a 6 ft. length of multi-conductor cable which has at one end, a mating connector to the REMOTE-ADAPTER jack on the right of the test set front panel. The other end has a unique TRI-CONTACT probe having finger tip spacing adjustment for in-circuit checking of transistors and diodes. A TEST button is conveniently located along the edge of the probe handle.

(3) Clip-Lead Adapter, part number 8625521: consists of a 4 ft. multi-conductor cable which has on one end a mating connector to the REMOTE ADAPTER jack on the right of the test set front panel. The other end has a set of four labeled clip-leads for connecting to components under test.

(4) Thermoelectric Temperature Regulator Module, part number 8625556: consists of a module and its attached power cord. The Temperature Regulator's power cord has a mating connector to the AUX POWER jack on the lower center

of the front panel. This module is only used where tests are to be conducted under simulated cold, hot, or regulated +25° centigrade temperature conditions.

(5) Component Adapter, part number 8625557: consists of a unique clamping device which mounts on the cold plate of the thermoelectric module and permits the mounting of various semiconductor devices for test.

(6) This instruction manual, part number M8625349.

(7) Punched Program Cards, part number 8625444: consists of 450 pre-punched program cards which control all test voltage, currents, test circuits and conditions, and test acceptance limits.

(8) Card Punch, part number 8625592: which is used to punch new programs into the spare cards supplied with the running spare parts.

CAUTION

Never punch additional holes in the pre-punched programmed cards supplied with this equipment or that may be supplied later as addendum.

10. Running Spares

The following running spares are supplied with each Test Set, Transistor AN/USM-136 and are located in the Accessory Case:

5 lamps, 24 volts, type 327, part number MS-25237-237

1 lamp, 24 volts, type 313, part number MS-15571-4

1 lamp, 6.3 volts, type 47, part number MS-15571-2

1 vacuum tube type 6AQ5A, ord. part number 8298924

1 vacuum tube type OB2WA, ord. part number 8034161

1 vacuum tube type 6AH6WA, ord. part number 7599312

1 vacuum tube type 6S4A, ord. part number 8625474

1 vacuum tube type OC2, ord. part number 8625473

55 spare program cards, ord. part number 8625444

CHAPTER 2

OPERATING INSTRUCTIONS

Section I SERVICE UPON RECEIPT OF EQUIPMENT

11. Purpose

a. When a new or reconditioned Test Set, Transistor AN/USM-136 is first received, it is the responsibility of the officer in charge to determine whether the material has been properly prepared for service by the supplying organization and to be sure it is in condition to perform its intended function. For this purpose, conduct a visual inspection of the test set to assure that it is undamaged and is complete. Check that every item is present and in good condition.

b. Make a record of any missing parts, and of any damage or malfunctions. Correct any deficiencies as quickly as possible.

12. Uncrating, Unpacking, and Checking New Equipment

a. General. The test set is packed in a reusable shipping container. When new equipment is received, select a location where the equipment may be unpacked without exposure to dust, dirt or excessive moisture. No special tools are required for unpacking.

b. Step-by-Step Instructions for Uncrating and Unpacking

(1) Place the reusable shipping container as near the operating position as convenient.

(2) Cut and fold back the steel straps if they have been provided around the container.

(3) Unlatch the top lid retainers.

(4) Remove the top lid of the reusable shipping container and any filler material. See Figure 3.

(5) Remove the test set and accessory case and place on work bench front face up.

(6) Remove the front cover of the test set (the one with the two carrying handles) by unlatching the four (4) retainers and lifting off. Unlatch the front-center mounting leg to the right of the AUX POWER jack and pull out the leg until it latches in the down position. Turn the test set up on its three mounting legs, front panel facing forward.

(7) Inspect the equipment for possible damage in shipment.

(8) Open the accessory case and the cover inside its top lid and remove the power cord. Except for inspection, do not remove the spare parts until they are required.

(9) Check the contents of the accessory case against the master packing slip.

Note: Save the reusable shipping container and the test set front cover. They are used again, when the equipment is repacked for storage or shipment.

13. Inspecting New Equipment

a. Unlatch the two (2) retainers on the right hand side just behind the front panel and swing open the front panel on its hinge, as opening a book.

b. Check to see that connector P101 is firmly connected in its socket on the rear of the front panel near the center.

c. Check for free rotation of the fan on the center web.

d. Check for broken wires, loose connections or loose wires. Close and relatch the front panel.

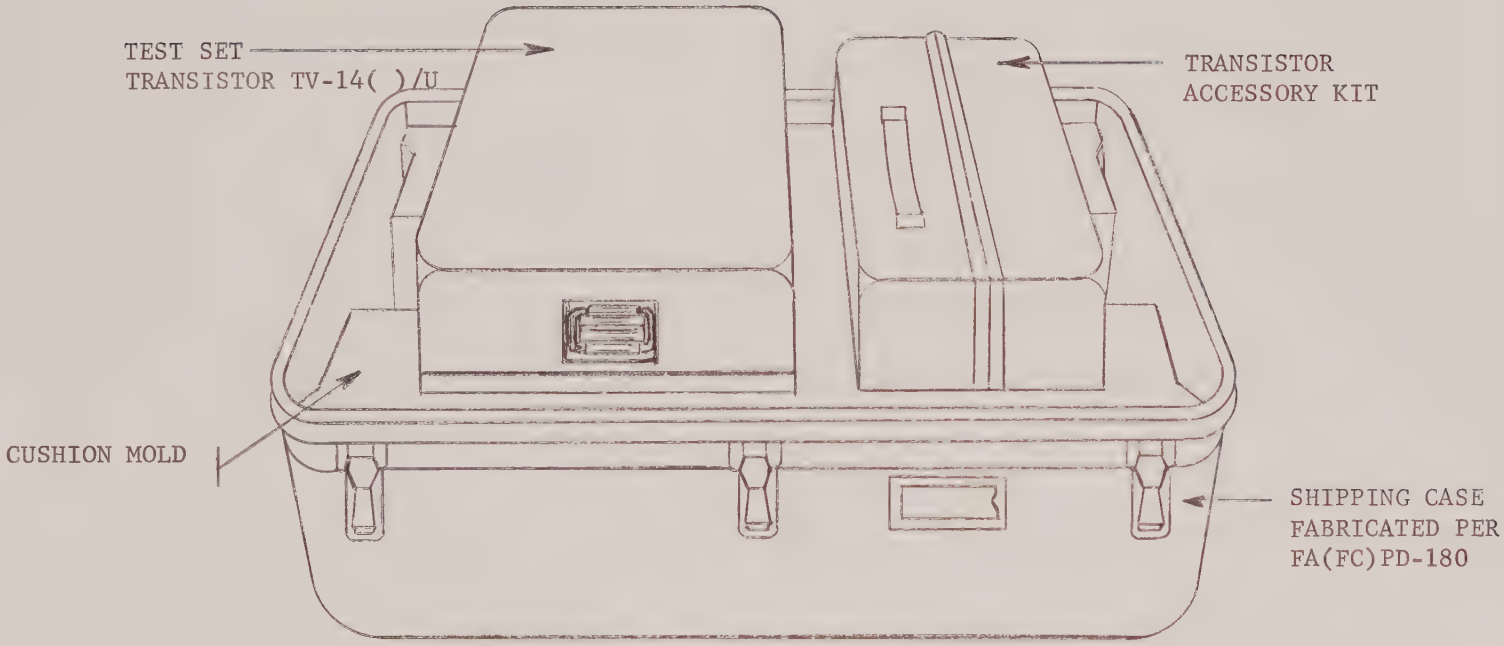

Figure 3. Automatic Transistor Tester in Shipping Container

e. Rest the test set on its left side and unlatch the four (4) retainers on the rear cover and remove the cover.

CAUTION

Do not adjust any of the rear controls without consulting the section in Chapter 4 of this manual dealing with calibration.

f. Check to see that connector P501 is firmly connected to its socket on the h_{fe} module A500.

g. Check to see that all tubes are firmly seated in their proper sockets on the power supply chassis.

h. Check to see that all eight (8) plug-in printed circuit cards are firmly connected in their respective sockets.

i. Replace and relatch the rear cover and return the unit to an operating position.

j. Connect the line cord to the unit at the lower-left side just behind the front panel. Plug the line cord into either 115 volts 60 cps - 400 cps or 230 volts 60 cps - 400 cps outlet and check the operation as outlined in paragraph 18. Since the test set is portable, it can be placed in any convenient location for inspection or for use. Be careful; however, not to obstruct the ventilating louvers over and under the front panel by placing things over them.

14. Service Upon Receipt of Used or Reconditioned Equipment

a. Follow the instructions in paragraph 12 for uncrating, unpacking, and checking the equipment.

b. Check the used or reconditioned equipment for tags or other indications pertaining to changes in wiring of the equipment. If any wiring

changes have been made, note the changes in this manual, preferably on the schematic diagram.

c. Inspection and operational checks will be the same as those outlined for new equipment.

Section II CONTROLS AND INDICATORS

15. Controls and Indicators and Their Use

a. The following table lists the controls and indicators shown in Figure 4 on the front of the test set, and indicates what they do:

TABLE III

Control or Indicator	Function
Input power connector (J2101)	Provides input Power connection to line cord.
POWER-OFF switch (S2101)	Controls application of power to the test set.
115 SELECT button (S2102)	Provides fail-safe means of switching from 230V to 115 volt input.
Pilot Light (DS2101)	Indicates that power supply is turned on.
CIRCUIT BREAKER (CB2101)	Provides dual protection, tripping at 2 amps for 115 volt operation and at 1 amp for 230V operation.
AUX POWER connector (J2102)	Provides connections to -28 volt supply and to a 115 volt AC winding under either 115 volt or 230 volt operation for use by external accessories such as the thermoelectric module.
Punched Program Card Reader (S1304)	Reads the holes in the card by switch closures which program voltages, currents, test circuits and test limits.
RESET button (S1302)	Interrupts any test and/or resets the complete test set to the READY position.
READY indicator (DS1301)	Indicates that the main test stepping switch and automatic lead selector - in-circuit checker stepping switch are in the "home" position.

Figure 4. Transistor Test Set AN/USM-136, Front Panel

TABLE III (Continued)

Control or Indicator	Function
TEST Button (S1303)	Starts the automatic lead selector - in-circuit checker sequence IF the LEADS switch is in the UNKNOWN position and enables/or starts the main test sequence.
LEADS switch (S102)	Selects either KNOWN operation which bypasses the automatic lead selector or the UNKNOWN operation which will permit automatic lead selection.
TRANSISTOR socket (J103)	Provides means for connecting to test transistors having 3 long wire leads.
DIODE clips (J101 and J102)	Provides means for connecting to test diodes having 2 long wire leads.
REMOTE ADAPTER (J104)	Provides means for connecting any external socket adapter to the test set such as the clip-lead adapter or the in-circuit probe. The TEST switch connections for the in-circuit mode of operation are also available at this connector.
IN-CIRCUIT IMP switch (S101)	Selects either a HIGH (above 9100 ohms) or LOW (down to 250 ohms for germanium or 500 ohms for silicon) in-circuit shunt test capability.
GO indicator (DS1302)	Indicates automatic lead selection or in-circuit checks successfully completed and/or all programmed tests within programmed acceptance limits upon arriving at test position 12.
NO-GO indicator (DS1303)	Indicates automatic lead selection or in-circuit checks not successfully completed for one of three reasons also indicated by appropriate lights, or one of programmed tests did not meet programmed acceptance limit. Tester stops at programmed test position which failed.
OPEN light (DS103)	Indicates that during automatic lead selection or in-circuit test an open junction was found.

TABLE III (Continued)

Control or Indicator	Function
SHORT or LOW IMP-light (DS102)	Indicates that during automatic lead selection or in-circuit test a short or low impedance (below testable value) was found.
NO GAIN light (DS101)	Indicates that during automatic lead selection or in-circuit test one of the following three conditions were found: (1) The test transistor was found to have no gain. (2) The test transistor was found to have an emitter-to-collector short. (3) The test transistor was found to have almost equal forward and inverse beta.
TEST NUMBER projector (XDS1309)	Is a projector which indicates on its screen the test positions from 1 through 12.
READOUT SECTION screen: Projection Digital Voltmeter Readout Indicators (XDS1306 and XDS1307) and shadow-lights for the left zero (DS1304), the right zero (DS1308), and the OFF SCALE indicator (DS1305).	Consists of a readout screen on which are projected the numbers 00 through 99. The two significant figure projection readout is centered on the screen and includes the two decimal points which are part of the four place programmable decimal used in conjunction with the shadow-lights for left and right zeros. If the counters generated a number in excess of 99 the OFF-SCALE indicator is turned on.
TEST DATA-ACCEPTANCE LIMIT switch (S1301)	When the test set is stopped in a programmed test position, the readout on the screen is the measured test data. When this switch is moved to the momentary ACCEPTANCE LIMIT position, the readout changes to the programmed acceptance limit for that test position. Release of the switch arm returns it to the test data position and readout.
AUTO-MANUAL-ADVANCE switch (S1306)	Selects the desired mode of stepping operation, either automatic stepping or manual stepping. If the manual mode has been selected, then a momentary switch deflection to the ADVANCE position is required to step to the next test position.

b. The following table lists the controls and indicators on the front of the Thermoelectric TEMPERATURE REGULATOR module and indicates what they do:

TABLE IV

Control or Indicator	Function
INPUT POWER CONNECTOR (P2401)	Provides 115 volt AC and minus 28V DC power to the module from the AUX POWER jack on the test set.
POWER ON-OFF switch (S2401)	Controls application of power to the module.
TEMP. SEL. switch (S2402)	Selects regulation temperature of plus 5°C, plus 25°C, or plus 50°C.
READY light (DS2401)	Indicates that the module has regulated to the temperature set by the TEMP. SEL. switch and that the operator should proceed with the test.

16. Use of Accessory Equipment

a. The Clip-Lead Adapter may be connected to the REMOTE-ADAPTER jack to allow connection to various test semiconductors which are not conveniently tested in the TRANSISTOR socket or DIODE clips. They are marked for use with the LEADS switch in the KNOWN position.

Note: Connection to the REMOTE-ADAPTER jack is accomplished by first, removing the protective cap with a simple straight pull-up motion upon grasping the outer ring, second, insert the connector into the jack, observing the key position (blue mark on ring) and pressing the ring around the connector nearest the jack in the direction of the jack, until a locking "click" is heard and a narrow orange ring can be seen around the middle. DO NOT TWIST or wiggle the connector on inserting, locking, or

removal. Removal of the connector is accomplished by grasping the ring near the jack and pulling straight out. Replacement of the protective dust-cover is accomplished by pressing the chained end with the thumb while holding the outer ring between the first two fingers. The cover can then be dropped in place, if the key (blue line on ring) is aligned.

CAUTION

With the LEADS switch in the KNOWN position the operator is responsible for proper identification and connection of the leads. Errors can damage the semiconductor being tested or may affect the test set adversely.

b. The In-Circuit Probe may be connected to the REMOTE-ADAPTER jack using the Note in paragraph a. above to allow connection to transistors and diodes while they are still soldered in their printed circuit board (Figure 5). Parallel connections to the TEST button are provided on the probe handle to start the in-circuit test, when the operator is sure he is on the test points with the probe.. No prior knowledge of transistor lead orientation is required.

c. The Thermoelectric TEMPERATURE REGULATOR module may be connected to the AUX POWER jack to provide temperature control to the device under test.

Note: Connection to the AUX POWER jack is accomplished by first, removing the protective cap with a simple straight pull-up motion upon grasping the outer ring, second, insert the connector into the jack, observing the key position (blue mark on ring) and pressing the ring around the connector nearest the jack in the

Figure 5. In-Circuit Probe on P/C Board

direction of the jack, until a locking "click" is heard and a narrow orange ring can be seen around the middle. DO NOT TWIST or wiggle the connector on inserting, locking, or removal. Removal of the connector is accomplished by grasping the ring near the jack and pulling straight out. Replacement of the protective dust-cover is accomplished by pressing the chained end with the thumb while holding the outer ring between the first two fingers. The cover can then be dropped in place, if the key (blue line on ring) is aligned.

A Selector knob will allow the establishment of either a cold (approximately plus 5°C), hot (approximately plus 50°C) or a regulated +25°C temperature on the "cold" plate of the thermoelectric module. A component adapter is also provided to enable universal attachment of various size semiconductors to the cold shoe. Test connections to the device mounted on the thermoelectric module are made by means of the clip-lead adapter.

Section III OPERATION UNDER USUAL CONDITIONS

17. General

This section contains instructions for the operation of the test set under conditions of moderate temperatures and humidity. Every organization equipped with this item must thoroughly train its personnel in the procedures for operating this item. For operation under unusual conditions, refer to Section IV of this chapter.

18. Preliminary Starting Procedure

The following preliminary starting procedure should be performed, when the equipment is first received or returned from a depot, to determine that

the equipment is in proper operating condition. Unless the test set has not been used for an extended period of time, it will be unnecessary to follow the procedure before each operating period.

a. Connect the power plug to either a 115 volt 60/400 cycle AC source or 230 volt 60/400 cycle source.

b. Check that the CIRCUIT BREAKER is on and turn the POWER switch on. If 230 volts is used, observe that the blue pilot light is on. If 115 volts is used, press the 115 SELECT button, then observe that the blue pilot light is on.

c. Press the RESET button and observe that the yellow READY light is on.

d. The equipment shall be permitted to warm up for 2 minutes before any test is conducted.

e. Place the LEADS switch into the KNOWN position, the AUTO-MANUAL-ADVANCE switch into the MANUAL position.

f. Insert the INSPECTION TEST CARD #2 all the way into the punched card reader with the printed legend visible at the top facing out and push in the center button marked PUSH TO CLOSE on the card reader to close and latch it.

Note: The punched card reader should be closed and latched only when a test is to be conducted. Do not leave closed and latched for prolonged periods of time when no tests are being conducted. Always remove card when tests are not being conducted.

g. Press the TEST button and then momentarily press the AUTO-MANUAL-ADVANCE switch into the ADVANCE position and release. This will advance the stepper to test position 1.

h. MANUAL-ADVANCE through test positions 1 through 12 and observe the operation of the following in each test position:

(1) The twelve (12) digit projector shall indicate each TEST NUMBER in proper sequence.

(2) The NO-GO light shall light in test position 1.

(3) The GO light shall light in all test positions except 1.

(4) While in test position 1, move the TEST DATA-ACCEPTANCE LIMIT switch to the ACCEPTANCE LIMIT position. The OFF SCALE indicator shall light in addition to whatever two digit numerical readout appears. Neither decimal or left or right zero shall light.

(5) Repeat the above test using the ACCEPTANCE LIMIT switch after MANUAL ADVANCE into test position 2, then MANUAL ADVANCE through to test position 8, conduct the above test, then MANUAL ADVANCE to test position 9 and repeat the above test. In positions 1, 2, 8, and 9, the OFF SCALE indicator shall light. In positions 8 and 9 the right hand zero shall light.

i. RESET the test set to READY. Press the card release button under the punched card reader and remove the inspection test card and replace with the IN-CIRCUIT PNP test card, for In-Circuit test of PNP transistors. Move LEADS switch to UNKNOWN position and place a known good general purpose transistor of PNP polarity (such as a 2N404 or equivalent) into the TRANSISTOR test socket.

j. Press the TEST button and within about 3 seconds the leads shall have been found and a GO light shall have lit.

k. RESET the test set to READY and place an external short between either the base and collector or the base and emitter of the transistor under test.

l. Press the TEST button and within about 3 seconds the SHORT or LOW IMP light and the NO-GO light shall have lit.

m. RESET the test set to READY and change the location of the external short to be between the collector and emitter of the transistor under test.

n. Press the TEST button and within about 3 seconds the NO GAIN light and the NO-GO light shall have lit.

o. RESET the test set to READY, remove the external short from the transistor under test. Remove any one lead of the transistor under test from the test socket allowing the other two leads to remain in place.

p. Press the TEST button and within 3 seconds the OPEN light and the NO-GO light shall have lit.

q. RESET the test set to READY, remove the inspection test card and test transistor.

r. Place the LEADS switch in the KNOWN position, insert the inspection test card #1. Insert a 100K ohm plus or minus 1 percent 2 watt test resistor between pins 5 and 1 of J104, the REMOTE ADAPTER (between collector and emitter using clip-lead adapter).

s. MANUAL ADVANCE into test position 6. The use of a scaling amplifier gain programmed to a value of 1,000 should produce a readout (including the right hand zero) from 460 to 540. The GO light shall stay lighted.

t. Press the ACCEPTANCE LIMIT switch. The programmed acceptance value of 96 shall produce a projection readout (including the right hand zero) of from 930 to 990.

u. Remove the one lead of the 100K ohm test resistor from pin 1 of J104 and connect to pin 3 of J104 (move from emitter clip to base clip using clip-lead adapter).

v. MANUAL ADVANCE into test position 8. The use of a scaling amplifier gain programmed to a value of 100 should produce a readout (including the left hand zero and decimal point) of from 0.46 to 0.54. The NO-GO light shall light.

w. Press the ACCEPTANCE LIMIT switch. The programmed acceptance value of 10 shall produce a projection readout (including the left hand zero and decimal point) of from 0.07 to 0.13.

x. Remove the 100K ohm test resistor from between pins 5 and 3 of J104 (between collector and base using clip-lead adapter) and replace with a 10K ohm plus or minus 1 percent 1/2 watt in the same location.

y. MANUAL ADVANCE into test position 9. The use of a scaling amplifier gain programmed to a value of 10 should produce a readout (including the center decimal point) of from 4.6 to 5.4. The NO-GO light shall light.

z. Press the ACCEPTANCE LIMIT switch. The programmed acceptance value of 03 shall produce a projection readout (including the center decimal point) of from 0.0 to 0.6.

aa. RESET the test set to READY, remove the inspection test card and the test resistor. Replace with inspection test card #5. Place a 10K ohm plus or minus 1 percent 1/2 watt test resistor between pins 5 and 1 of J104 (between collector and emitter using clip lead adapter).

ab. MANUAL ADVANCE into test position 6 and observe the projection digital voltmeter readout. The programmed value of 10 volts emitter-to-collector voltage across the 10K ohm test resistor in series with the programmed internal measurement resistor of 80 ohms and the programmed scaling amplifier gain of X100 should produce a readout from 75 to 85.

ac. RESET the test set to READY, remove the inspection test card and the test resistor. Replace with the inspection test card #6. Place an external short between pins 5 and 3 of J104 (between collector and base using clip-lead adapter).

ad. MANUAL ADVANCE into test position 7 and observe the projection digital voltmeter presentation. The programmed value of 5 volts across the programmed internal measuring resistor of 100 ohms should produce a reading of from 47 to 53.

ae. Remove the external short established by the clip-lead adapter.

af. MANUAL ADVANCE into test position 11 and observe the projection digital voltmeter presentation. The programmed value of 0.75 milliamperes (using the current supply and voltage supply in series) through the internal test resistor produces a voltage which is divided 10:1 and is presented as a projection readout of from 71 to 79.

ag. RESET the test set to READY, remove the inspection test card. Replace with the inspection test card #7. Place a 200 ohm plus or minus 1 percent 10 watt resistor between pins 3 and 5 of J104 (between base and collector using clip-lead adapter).

ah. MANUAL ADVANCE into test position 12 and observe the projection digital voltmeter presentation. The readout shall be from 160 to 240.

ai. RESET the test set to READY, remove the inspection test card, and test resistor.

Note: Always remove test card upon completion of a test. Never leave a test card in the card reader for prolonged periods of time when no tests are being conducted.

Note: The above tests exercise most of the components of the test set but do not fully check out the entire performance envelope such as delineated in the acceptance inspection tests of Section 4.9.2 of MIL-T-55202.

If an abnormal result is obtained during the above preliminary tests, refer to trouble shooting procedures.

CAUTION

Do not remove the rear cover and adjust any of the rear controls without consulting the section of Chapter 4 in this manual dealing with calibration.

19. Operation

a. Starting. Throw the POWER switch on. If 230 volts is used, the test set will come right on. If 115 volts is used, press the 115 SELECT button to complete the turn on operation. Press the RESET button to clear the test set and return it to the READY position which will be so indicated. Allow a short period of time for the tubes to warm up. When accurate measurements are to be made, allow at least 5 minutes for warm-up time before starting any test.

b. Out-of-Circuit Testing. Refer to Figure 6, the Operating Sequence Block Diagram for out-of-circuit tests.

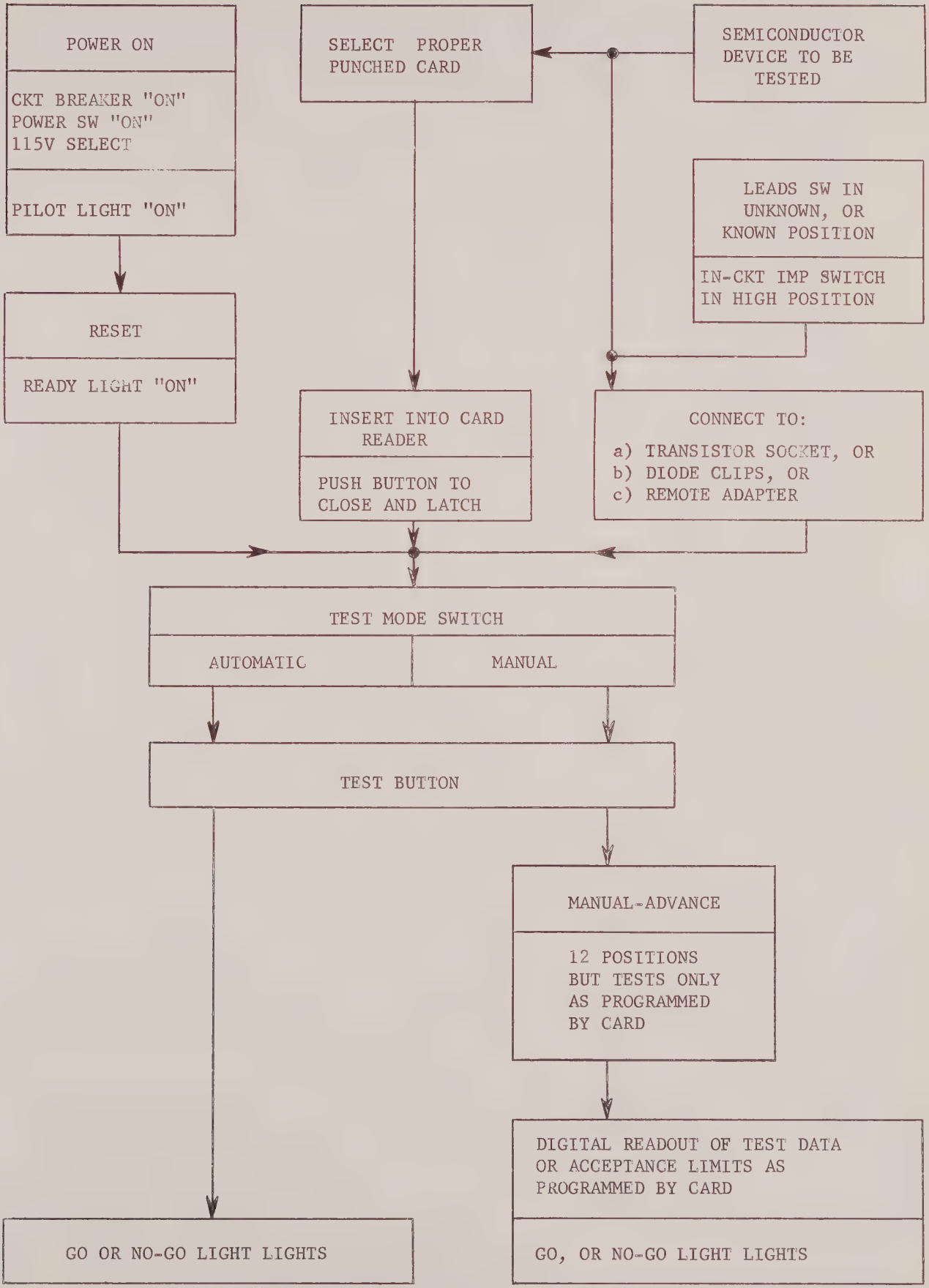

Figure 6. Operating Sequence Block Diagram for Out-of-Circuit Tests.

(1) Identify the semiconductor device you wish to test. For out-of-circuit tests, select the proper prepunched program card for that semiconductor device.

CAUTION

The improper selection of and/or use of the wrong prepunched program card can damage the semiconductor device you are testing.

(2) Place the LEADS switch in the UNKNOWN position to enable automatic lead selection of the device being tested. This function checks for shorts, opens and the presence of gain and the operator does not have to identify the leads.

CAUTION

With the LEADS switch in the KNOWN position the operator is responsible for proper identification and connection of the leads. Errors can damage the semiconductor being tested or may affect the test set adversely.

Note: If the device to be tested is non-checkable with the automatic lead selector, (such as 4 terminal devices, tunnel diodes, S.C.R.'s, etc.) the use of LEADS KNOWN is required, however, be sure of the proper lead connections to the clip-lead adapter prior to starting the test sequence. The TRANSISTOR and DIODE sockets are disconnected, when using LEADS KNOWN.

(3) Insert the selected prepunched program card all the way into the punched card reader with the printed legend visible at the top facing out, and push in the center button marked PUSH TO CLOSE on the card reader

to close and latch it. A fail-safe card interlock prevents starting an actual test until the card is in the proper place.

Note: The punched card reader should be closed and latched only when a test is to be conducted. Do not leave closed and latched for prolonged periods of time when no tests are being conducted. Always remove card when tests are not being conducted.

(4) Place the IN-CKT. IMP. switch in the HIGH position.

(5) Place the transistor to be tested in either the TRANSISTOR test socket or use the clip-lead adapter.

Note: Do not use clip-lead marked "4th LEAD" on 3 lead devices.

If a diode is to be tested place it in either the DIODE clips or use the clip-lead adapter leads marked for ANODE and CATHODE.

Note: Connection to the REMOTE-ADAPTER jack is accomplished by first, removing the protective cap with a simple straight pull-up motion upon grasping the outer ring, second, insert the connector into the jack, observing the key position (blue mark on ring) and pressing the ring around the connector nearest the jack in the direction of the jack, until a locking "click" is heard and a narrow orange ring can be seen around the middle. DO NOT TWIST or wiggle the connector on inserting, locking, or removal. Removal of the connector is accomplished by grasping the ring near the jack and pulling straight out. Replacement of the protective dust-cover is accomplished by pressing the chained end with the thumb while holding the outer ring between the first two fingers. The cover can then be dropped in place, if the key (blue line on ring) is aligned.

(6) Automatic stepping. Place the AUTO-MANUAL-ADVANCE switch to the AUTO position and then momentarily press the TEST button to begin the test sequence. The automatic stepping through the 12 positions which include the specific tests programmed on the punched cards will then take place. Due to the stepping speed, only Go, No-Go indications need be considered.

(a) If LEADS UNKNOWN is used, Automatic Lead Selection time is about 3 seconds and ends with a tentative GO indication. This indicates that automatic lead selection has been accomplished and enables the start of the previously mentioned programmed tests. If a NO-GO is indicated, the test sequence stops and the cause is indicated by either the SHORT or LOW IMP, OPEN, or NO GAIN lights.

(b) Test time for programmed semiconductor tests is about 6 seconds which starts either just after successful automatic lead selection or directly on pressing the TEST button, when LEADS KNOWN is used. The operation is completed upon arriving in TEST NUMBER 12 position where, if the GO indicator is still lighted, all the programmed test measurements were found to be within the programmed acceptance limits. If a NO-GO is indicated, the test sequence stops at the programmed test position that did not meet the programmed acceptance limit. This test position is indicated by the TEST NUMBER projector.

(7) Manual stepping. Place the AUTO-MANUAL-ADVANCE switch to the MANUAL position, then momentarily press the TEST button to start either automatic lead selection if LEADS UNKNOWN is used or establish a start capability if LEADS KNOWN is used. By momentarily pressing down the AUTO-MANUAL-ADVANCE switch to the ADVANCE position and releasing it for

each test position the manual stepping through any or all of the 12 positions which include the specific tests programmed on the punched cards is accomplished.

(a) When the manual stepping arrives in test position 12 and the GO indicator is still lighted and has not changed to NO-GO during any of the 12 steps then the programmed test measurements were found to be within the programmed acceptance limits. A NO-GO is indicated directly as the programmed test position is tested and the measured data is shown on the readout screen. It indicates that the measured data did not meet the programmed acceptance limit for that specific test.

(b) If for any programmed test position where test data is shown on the readout screen, it is desired to know the value of the programmed acceptance limit, the TEST DATA-ACCEPTANCE LIMIT switch should be moved over to the ACCEPTANCE LIMIT position and the projection readout will change to read the acceptance limit. Release of the switch arm returns it to the TEST DATA position and readout.

(8) Press the RESET button to return the test set to the READY position. Remove the semiconductor device that has been tested. Press the card release button under the punch card reader and remove the card.

Note: Always remove test card upon completion of a test. Never leave a test card in the card reader for prolonged periods of time when no tests are being conducted.

c. In-Circuit Checking.

(1) Identify the type semiconductor device you wish to test. For in-circuit tests, select the proper prepunched program card for that type semiconductor device.

CAUTION

The use of any out-of-circuit test prepunched program card can damage the semiconductor device you are testing and the circuit in which it is located.

(2) Place the LEADS switch in the UNKNOWN position to enable in-circuit test of the device being tested. This function checks for shorts, opens and the presence of gain.

Note: If the device to be tested is non-checkable with the automatic lead selector, (such as 4 terminal devices tunnel diodes, S.C.R.'s, etc.) then the same device cannot be tested in-circuit.

(3) Insert the selected prepunched in-circuit program card all the way into the punched card reader with the printed legend visible at the top facing out, and push in the center button marked PUSH TO CLOSE on the card reader to close and latch it.

Note: The punched card reader should be closed and latched only when a test is to be conducted. Do not leave closed and latched for prolonged periods of time when no tests are being conducted. Always remove card when tests are not being conducted.

(4) Place the IN-CKT. IMP. switch in the HIGH position.

(5) Connection to the test device.

(a) If the device to be tested is mounted on a printed wiring board in such a way as to allow the use of the In-Circuit Probe, connect the in-circuit probe to the REMOTE-ADAPTER jack.

Note: Connection to the REMOTE-ADAPTER jack is accomplished by first, removing the protective cap with a simple straight pull-up motion upon grasping the outer ring, second, insert the connector into the jack, observing the key position (blue mark on ring) and pressing the ring around the connector nearest the jack in the direction of the jack, until a locking "click" is heard and a narrow orange ring can be seen around the middle. DO NOT TWIST or wiggle the connector on inserting, locking, or removal. Removal of the connector is accomplished by grasping the ring near the jack and pulling straight out. Replacement of the protective dust-cover is accomplished by pressing the chained end with the thumb while holding the outer ring between the first two fingers. The cover can then be dropped in place, if the key (blue line on ring) is aligned.

If a transistor is to be tested, adjust the finger-tip controls for correct spacing of the three test tips. Press them hard enough against the test connections to make good contact, as shown in Figure 5. The test tips are sharp enough to cut through most protective varnishes or even corrosion, if present. If a diode is to be tested, retract the center test tip and use only the two outer ones for the in-circuit check.

(b) The clip-lead adapter may be connected to the REMOTE-ADAPTER jack to allow connection to various test semiconductors which are not of a size, shape, or orientation conveniently usable with the probe.

(c) A simple quality check of an out-of-circuit transistor or diode may be made by using the in-circuit test feature where more detailed testing is not required. Just place the component in the TRANSISTOR or DIODE socket (or even use the clip-lead adapter) and proceed.

(6) Parallel connections to the TEST button are provided on the probe handle to start the in-circuit test, when the operator is sure he is on the test points with the probe. If the clip-lead adapter is used or the semiconductor device to be tested has been placed in the TRANSISTOR or DIODE socket, the main TEST button is used to start the in-circuit check.

(7) Press the TEST button. Within about 3 seconds the GO indicator will light to signify that the semiconductor under test has been found to be a gainful device (if a transistor) and that neither shorted or open junctions have been found.

(8) If a NO-GO indication is obtained, one of the following conditions were found and are indicated:

(a) An open circuit between one of the junctions was found. The OPEN indicator would also light.

(b) The transistor under test was not found to have gain. The NO-GAIN indicator would also light. Actually, the NO-GAIN indication can mean one of three possible conditions:

1) Actually no gain (Beta) from the transistor.

2) Emitter to collector short or low impedance.

3) Forward Beta and Inverse Beta appear to the test set to be about the same.

(c) A short or low impedance was found across the diode junction (or a base junction of a transistor). The SHORT OR LOW IMP. indicator would also light.

(9) In the case of a SHORT OR LOW IMP indication, RESET the test set to READY and move the IN-CKT IMP switch to the LOW position which brings the test capability in the presence of in-circuit shunts down to 250 ohms for germanium devices and 500 ohms for silicon devices and then repeat the in-circuit check. If the NO-GO and SHORT OR LOW IMP indicators still light on the second try, the semiconductor junction under test was found to be either shorted or have a low impedance across it.

d. Stopping. Press the RESET button which will stop any active test at any point in the sequence and will advance the steppers in the main test set and in the automatic lead selector - in-circuit checker to the home position and light the READY light.

Note: In any emergency throw the test set POWER switch to the OFF position.

Press the card release button under the punched card reader and remove the punched program card.

Note: Always remove test card upon completion of a test. Never leave a test card in the card reader for prolonged periods of time when no tests are being conducted.

Remove the semiconductor under test from any connection to the test set.

Section IV OPERATION OF MATERIAL USED IN CONJUNCTION WITH THE TEST SET

20. Thermoelectric Module

If the test of a semiconductor requires a regulated temperature, either hot, cold, or at +25°C, the thermoelectric module is used.

a. Attach the component adapter to the "cold" plate.

b. Connect the power cord of the thermoelectric module into the AUX POWER jack on the front panel of the test set.

Note: Connection to the AUX POWER jack is accomplished by first, removing the protective cap with a simple straight pull-up motion upon grasping the outer ring, second, insert the connector into the jack, observing the key position (blue mark on ring) and pressing the ring around the connector nearest the jack in the direction of the jack, until a locking "click" is heard and a narrow orange ring can be seen around the middle. DO NOT TWIST or wiggle the connector on inserting, locking, or removal. Removal of the connector is accomplished by grasping the ring near the jack and pulling straight out. Replacement of the protective dust-cover is accomplished by pressing the chained end with the thumb while holding the outer ring between the first two fingers. The cover can then be dropped in place, if the key (blue line on ring) is aligned.

c. Turn the TEMP SEL knob on the Temperature Regulator module to the temperature desired for the test, either cold (+5°C), hot (+50°C), or regulated +25°C.

d. Follow the test set starting procedure of paragraph 19.a., except that after 10 seconds, the POWER ON-OFF switch on the top of the thermoelectric TEMPERATURE REGULATOR module may also be turned to the ON position.

e. Follow the Out-of-Circuit Testing procedure of paragraphs 19.b.(1), (2), (3), and (4). Be sure to observe the CAUTION and NOTE of paragraph 19.b.(2).

f. Place the transistor or diode to be tested in the component adapter to give best contact to the "cold" plate.

g. Plug the clip-lead adapter into the REMOTE ADAPTER jack on the test set and connect the clip-leads to the semiconductor under test.

Note: Do not use clip-lead marked 4th LEAD on 3 lead devices.
If a diode is to be tested, use the clip-leads marked ANODE and CATHODE.

h. Wait until the green READY light on the temperature regulator comes on before proceeding with a test.

i. Follow the Out-of-Circuit Testing procedure of paragraph 19.b.(6) for automatic stepping or 19.b.(7) for manual stepping.

j. When all testing requiring the thermoelectric TEMPERATURE REGULATOR module is complete, follow the stopping procedure of paragraph 19.d. Turn the temperature regulator POWER switch to the OFF position. Disconnect the power cord from the AUX POWER jack.

Section V OPERATION UNDER UNUSUAL CONDITIONS

21. General

The Test Set, Transistor AN/USM-136 may be required to perform tests under severe climatic conditions which prevail in tropical, arctic, or desert regions, or where excessive moisture, dust, or sand is present.

In addition to the normal operating procedures described in Section III, Operation Under Usual Conditions, special instructions for operating under

unusual conditions are contained herein. In addition to the normal preventive-maintenance services (Sec. III, Ch. 3), special care in cleaning and lubrication must be observed where extremes of temperature, humidity, and atmospheric conditions are present. Proper cleaning, lubrication, and storage and handling of lubricants not only insure proper operation and functioning, but also guard against excessive wear of the working parts and deterioration of the material.

During conditions of excessive dust, sand, or humidity or, when daily use of the test set is not anticipated, the protective front cover should be replaced and latched. Keep the uncovered unit out of rain.

22. Operation in Extreme Cold-Weather Conditions

Follow the procedures of Section III, however, to obtain the most accurate readings, allow as long a warm-up as possible over the specified 5 minutes.

23. Operation in Extreme Hot-Weather Conditions

Follow the procedures of Section III, however, to obtain the most accurate readings, the warm-up time can be reduced to about 1 minute. When not required by the operational requirements, do not leave the test set turned ON but unused for prolonged periods of time. Be very careful not to obstruct the ventilating louvers over and under the front panel.

CHAPTER 3

OPERATOR AND ORGANIZATIONAL MAINTENANCE INSTRUCTIONS

Section I REPAIR PARTS, TOOLS, AND EQUIPMENT

24. General

Repair Parts are supplied to the operator and organization for maintaining the test set. The spare parts should not be used for purposes other than prescribed and, when not in use should be properly stored.

25. Repair Parts

The Repair Parts supplied to the using organization for replacement of those parts most likely to become unserviceable, and are within the scope of operator and organizational maintenance functions are the three types of lamp bulbs listed as spare parts in paragraph 10.

26. Common Tools and Equipment

Common tools and equipment having general application to this material for operator and organizational maintenance are authorized by tables of allowances and table of organization and equipment.

27. Special Tools and Equipment

No tools or equipment specially designed for operator or organizational maintenance are supplied or required for the test set.

CAUTION

Do not remove the rear cover except for the inspection mentioned in paragraph 13.e. through paragraph 13.i. Do not adjust any of the rear controls without consulting the section in Chapter 4 of this manual dealing with calibration.

Note: Do not replace vacuum tubes at an operator or organization level because replacement necessitates a calibration recheck.

Section II LUBRICATION

28. Lubrication Instructions

Lubrication of no part of the test set is required at an operator or organizational level. All lubrication is accomplished at a field or depot level.

Section III PREVENTIVE-MAINTENANCE SERVICES

29. General

a. Responsibility and Intervals. The primary function of preventive maintenance is to prevent breakdowns and, therefore, the need for repair. Preventive-maintenance differs from troubleshooting and repair since its object is to prevent certain troubles from occurring. These services consist generally of before-operation, during-operation, and after-operation services performed by the operator. Intervals are based on normal operations. Reduce intervals for abnormal operations or severe conditions. Intervals during inactive periods may be extended accordingly.

b. Definition of Terms. The general inspection of each item applies also to any supporting member or connection and is generally a check to see whether the item is in good condition, correctly assembled, secure, and not excessively worn.

(1) The inspection for "good condition" is usually an external visual inspection to determine whether the unit is damaged beyond serviceable limits. The term "good condition" is explained further by the following:

not bent or twisted, not chafed or burred, not broken or cracked, not bare or frayed, not dented or collapesed, not torn or cut, not deteriorated.

(2) The inspection of a unit to see that it is "correctly assembled" is usually an external visual inspection to see whether it is in its normal assembled position.

(3) Inspection of a unit to determine if it is "secure" is usually an external visual examination or an examination by hand or wrench for looseness. Such an examination must include any brackets, lock washers, lock nuts, locking wires, or cotter pins used.

(4) By "excessively worn" is meant worn beyond serviceable limits or to a point likely to result in failure if the unit is not replaced before the next scheduled inspection.

30. Cleaning

a. General Cleaning Instructions

(1) Use No. 0000 sandpaper to remove corrosion.

(2) Use a clean, dry, lint-free cloth, or dry brush for cleaning.

(3) Use carbon tetrachloride for cleaning electrical parts, but do not use on soluble material.

WARNING

Repeated contact of carbon tetrachloride with the skin or prolonged breathing of the fumes is dangerous. Make sure adequate ventilation is provided.

(4) If available, dry compressed air may be used at a line pressure not exceeding 60 psi to remove dust from inaccessible places.

b. General Precautions in Cleaning

(1) Provide adequate ventilation both during and after use of carbon tetrachloride. Work rooms must not be closed in. Avoid prolonged inhalation of vapor; headache or nausea may result. In contact with skin, this cleaner may cause irritation.

(2) Self-emulsifying degreasing solvent compound, mineral spirits paint thinner, and dry-cleaning solvent are flammable and should not be used near an open flame. Fire extinguishers should be provided when these materials are used. Use only in well-ventilated places. These cleaners evaporate quickly and have a drying effect on the skin. If used without gloves, they may cause cracks in the skin and, in the case of some individuals, a mild irritation or inflammation.

(3) Avoid getting petroleum products, such as mineral spirits paint thinner, dry-cleaning solvent, engine fuels, or lubricants, on rubber parts, as they will deteriorate the rubber.

(4) The use of Diesel fuel oil, gasoline, or benzene (benzol) for cleaning is prohibited.

31. Performing Preventive Maintenance

The preventive maintenance operations listed below should be performed by operator or organizational personnel at the intervals indicated.

CAUTION

The Test Set, Transistor AN/USM-136 is a sensitive instrument designed for automatic precision measurements. Use extreme caution in maintenance procedures. Careless removal of knobs, tubes, plug-in boards, covers, etc. may necessitate recalibration which can only be accomplished by

skilled personnel and the use of special calibrating equipment. Do not attempt any replacements, except those outlined below.

a. Weekly

(1) Clean the exterior of the equipment.

(2) Check the operation of the pilot light lamp. If it is found to be burned out, unscrew the blue lamp cover from the front panel and remove the lamp from the front panel. Replace with a type 47 lamp from the running spares and replace the blue lamp cover.

(3) Check the operation of the READY, GO, and NO-GO indicators. If any are found to be burned out, withdraw the labled lamp cover straight out from the front panel and remove the lamp from the front panel. Replace with a type 313 lamp from the running spares and replace labled lamp cover by pressing straight in.

(4) Check the operation of the OPEN, NO GAIN, and SHORT OR LOW IMP indicators. If any are found to be burned out, unscrew the colored lamp cover and note that the lamp comes out with, and is still inside the colored lamp cover. Remove the lamp from the colored lamp cover by pulling it straight out the rear. Replace with a type 327 from the running spares and replace the colored lamp cover.

(5) Note if during the previous period of operation any of the following indicator bulbs are burned out:

(a) TEST NUMBER projector, twelve (12) bulbs

(b) READOUT SECTION screen

1) OFF SCALE indicator, one (1) bulb

2) far left ZERO, one (1) bulb

3) left decade, twelve (12) bulbs

4) right decade, ten (10) bulbs

5) far right ZERO, one (1) bulb

If a further check of the equipment indicates that any of the above lamps are burned out, refer to paragraph 69b and 69c before attempting to replace them.

(6) Check all of the knobs, switches and buttons for ease of operation.

b. Monthly

(1) Disconnect the power cord from the AC source.

(2) Unlatch the two (2) retainers on the right hand side just behind the front panel and swing open the front panel on its hinge, as opening a book.

(3) Check to see that connector P105 is firmly connected in its socket on the rear of the front panel near the center.

(4) Check for free rotation of the fan on the center web.

(5) Make a visual inspection for loose contacts, broken wires, dirt or corrosion.

(6) Check resistors for discoloration or other signs of overheating.

(7) Check MFP coatings for breaks. Retouch with a brush, if necessary.

(8) Close and relatch the front panel.

(9) Rest the test set on its left side and unlatch the four (4) retainers on the rear cover and remove the cover.

CAUTION

Do not adjust any of the rear controls without consulting the section in Chapter 4 of this manual dealing with calibration.

(10) Check to see that connector P501 is firmly connected to its socket on the h_{fe} module, A500.

(11) Check to see that all tubes are firmly seated in their proper sockets on the power supply chassis.

(12) Check to see that all eight (8) plug-in printed circuit cards are firmly connected to their respective sockets.

(13) Make a visual inspection for loose contacts, broken wires, dirt or corrosion.

(14) Check resistors for discoloration or other signs of overheating.

(15) Check MFP coatings for breaks. Retouch with a brush, if necessary.

(16) Replace and relatch the rear cover and return the unit to an operating position. Reconnect the line cord.

Section IV TROUBLESHOOTING

32. Purpose

Troubleshooting is a systematic determination of malfunctions and defective components by indications, symptoms, and tests. Close adherence to the procedures covered herein will materially reduce the time required to locate trouble and restore the materiel to normal operation.

CAUTION

Operation of materiel without a preliminary examination can cause further damage to a disabled component. Be careful

during inspection and troubleshooting, so that damage can be avoided.

33. Scope

This section covers troubleshooting which is peculiar to the operator's (first echelon) and organizational (second echelon) maintenance operations.

34. Procedure

Malfunctions which may occur with the Test Set are listed in Table V. Upon observing any one of these malfunctions, take immediate steps to locate and correct the cause. Causes are listed opposite each malfunction and are arranged according to the ease of correction.

TABLE V TROUBLESHOOTING

Malfunction	Probable Cause	Corrective Action
1. Test Set fails to turn ON.	a. Test Set not connected to power source receptacle.	a. Insert plug of cord assembly in power sources receptacle. (See para. 18.a.)
	b. Use of 115 volt line	b. Press 115 SELECT button (See para. 18.b.)
	c. Circuit breaker tripped	c. Reset circuit breaker (See para. 18.b.)
	d. Other causes	d. Refer other causes to field or depot maintenance personnel for correction.
2. Blue pilot light not lighted.	a. Burned out bulb	a. Replace with type 47 bulb (See para. 31.a.2)
	b. Other causes	b. Refer other causes to field or depot maintenance personnel for correction.

	Malfunction	Probable Cause	Corrective Action
3.	READY, GO, or NO-GO indicators do not light, when required.	a. Burned out bulb	a. Replace with type 313 bulb (See para. 31.a.3)
		b. Other causes	b. Refer other causes to field or depot maintenance personnel for correction.
4.	OPEN, NO-GAIN, or SHORT or LOW IMP indicator. Do not light when required.	a. Burned out bulb	a. Replace with type 327 bulb (See para. 31.a.4)
		b. Other causes	b. Refer other causes to field or depot maintenance personnel for correction.
5.	Any of twelve (12) TEST NUMBER indicators. Do not light when required.	a. Burned out bulb	a. Replace with type 327 bulb (See para. 69b)
		b. Other causes	b. Refer other causes to field or depot maintenance persnonnel for correction
6.	READOUT SECTION screen: a) OFF SCALE b) far left ZERO c) left decade d) right decade e) far right ZERO	a. Burned out bulb	a. Replace with type 327 bulb (See para. 69b or 69c)
		b. Other causes	b. Refer other causes to field or depot maintenance personnel for correction.

Section V WEATHERPROOFING

35. Weatherproofing

a. General. The Test Set, when operated under severe climatic conditions such as prevail in tropical, arctic, and desert regions, requires special treatment and maintenance. Fungus growth, insects, dust, corrosion, salt spray, excessive moisture, and extreme temperatures are harmful to most materials.

36. Rustproofing and Painting

a. When the finish on the case has been badly scarred or damaged, corrosion can be prevented by touching up bared surfaces. Use No. 00 or No. 000 sandpaper to clean the surface down to the bare metal; obtain a bright smooth finish.

CAUTION

Do not use steel wool. Minute particles frequently enter the case and cause harmful internal shorting or grounding of circuits.

b. When a touch-up job is necessary, apply paint with a small brush. Remove corrosion from the case by cleaning corroded metal with Solvent, dry-cleaning (SD). In severe cases it may be necessary to use solvent (SD) to soften the rust and to use sandpaper to complete the preparation for painting. Paint used will be authorized and consistent with existing regulations. See TM 9-2851.

CHAPTER 4

FIELD AND DEPOT MAINTENANCE INSTRUCTIONS

Note: This chapter contains information for field maintenance personnel. The amount of repair that can be performed by units having field maintenance responsibility is limited only by the tools and test equipment available, and by the skill of the repairman.

Section I PREREPAIR PROCEDURES

37. Tools, Materials, and Test Equipment

a. General. Repair Parts are supplied to the field and depot for maintaining the test set. The spare parts should not be used for purposes other than prescribed and, when not in use, should be properly stored.

b. Repair Parts. The Repair Parts supplied to the using organization for replacement of those parts most likely to become unserviceable, and are within the scope of field and depot maintenance functions are listed as spare parts in paragraph 10. and in a table of spare parts for field and depot use.

c. Common Tools and Equipment. Common tools and equipment having general application to this material for field and depot maintenance are authorized by tables of allowances and table of organization and equipment.

d. Special Tools and Equipment. No tools or equipment specially designed for field or depot maintenance are supplied or required for the test set.

Tools, materials, and test equipment needed for performing the prerepair procedures in this section are listed below:

Tool Equipment TE-113.

Solvent (SD), Federal specification P-S-661a.

Tube Tester I-177.

Multimeter TS-352/U.

Crocus cloth.

38. Removal of Pluck-Out Parts

a. Removing Tubes

(1) Rest the test set on its left side and unlatch the four (4) retainers on the rear cover and remove the cover.

CAUTION

Do not adjust any of the rear controls without consulting the section in this chapter dealing with calibration. Replacement of a tube in the power supply will require recalibration of only the power supply section using the new tube.

(2) Remove the tube shields by pushing them down and turning them counterclockwise.

(3) Using Tube Puller TL-201, remove all of the tubes located on the power supply chassis. Do not rock the tube if it can be removed by a direct upward pull. If it does not release readily, rock it gently to avoid spreading the tube prongs or contacts of the socket. Label each tube as it is removed to assure its replacement in its proper socket.

b. Test Number and Readout Section Lamps. Do not remove any lamp unless it requires replacement. If replacement is necessary, follow the procedure outlined in paragraph 69.

39. Cleaning, Inspecting, and Testing Removed Parts

a. Cleaning. Clean the tubes with a cloth moistened with solvent (SD); if necessary, clean the prongs with crocus cloth.

b. Inspecting. Inspect the tubes for cracks in the glass and the base and for bent or broken prongs.

c. Testing. Use the tube tester to test the tubes for short circuits, leakage, and proper emission. Check lamps for continuity.

40. Cleaning and Inspecting Chassis Assembly.

a. Cleaning. Remove loose dirt and dust from the power supply with a brush or blower. Be extremely careful when cleaning to prevent any damage to parts or wiring. Remove dirt and grease which adhere to the chassis or parts with a brush or cloth moistened with solvent (SD). Reposition the test set, open the front panel and perform above cleaning.

b. Inspecting. After the chassis has been carefully cleaned, make a visual inspection of the parts and wiring for rust, corrosion, loose connections, frayed or burned insulation, loose screws, and charred resistors and coils. Inspect the tube sockets and switches for broken contacts, and inspect terminal boards for broken lugs and signs of burning. Check MFP coatings for breaks. Retouch with a brush, if necessary.

41. Reassembling the Test Set

a. Close and relatch the front panel.

b. Replace the tubes. Be sure that all tubes are placed in the correct sockets.

c. Replace and relatch the rear cover and return the unit to an operating position. Connect the line cord.

Section II TROUBLE SHOOTING AT FIELD AND DEPOT MAINTENANCE LEVEL

42. Trouble-Shooting Procedures

a. General. The first step in servicing the test set is to sectionalize

the fault. Sectionalization means tracing the fault to the major component or circuit responsible for the abnormal operation of the set. The second step is to localize the fault. Localization means tracing the fault to the defective part responsible for the abnormal condition. Some faults such as burned-out resistors, r-f arcing, and shorted transformers can often be located by sight, smell, and hearing. The majority of faults, however, must be localized by checking voltage and resistance.

b. Component Sectionalization and Localization. The tests listed below aid in isolating the source of trouble. For maximum effect, follow the procedure in the order given. Remember that the servicing procedure should cause no further damage to the test set. First the trouble should be localized to a single stage or circuit. Then the trouble may be isolated within that stage or circuit by appropriate voltage, resistance, and continuity measurements. The service procedure is summarized as follows:

(1) Visual inspection. The purpose of visual inspection (par. 40) is to locate any trouble. Frequently through this inspection alone, the repairman may discover the trouble. This inspection is valuable also in forestalling future failures and in avoiding additional damage which might occur through improper servicing methods.

(2) Power supply resistance measurements. These measurements (par. 46) prevent further damage to the test set from possible short circuits.

(3) Operational check. The operational check (par. 48) is important because it indicates, frequently, the general location of trouble and the nature of the fault. In order to utilize this information fully, each symptom of trouble must be interpreted with respect to its relation to other symptoms.

(4) Trouble-shooting chart. The trouble symptoms listed in this chart (par. 48) will aid greatly in localizing trouble.

(5) Intermittents. In all of the above tests, the possibility of intermittents should not be overlooked. If present, this type of trouble often may be forced to reappear by tapping or jarring the set. This trouble may not be caused by the set itself but by faulty cables or connectors. Check by substituting cables known to be in good working order.

43. Trouble-Shooting Data

Take advantage of the material supplied in this manual. It will help in the rapid location of faults. Consult the following trouble-shooting data:

TABLE VI

Reference	Description
Para. 18	Preliminary Starting Procedure
Fig. 6	Operating Sequence Block Diagram
Table III	Controls, Indicators, and Their Use
Table V	Troubleshooting, Operator and Organization
Para. 46	Power Supply Resistance Measurements
Para. 47	Other Resistance Measurements
Para. 48	Operational Test
Appendix III	Schematic Diagrams

44. Test Equipment Required for Trouble Shooting

The test equipment required for trouble shooting Test Set, Transistor AN/USM-136 is listed below in Table VII. The accuracy requirements for the test equipment are also listed.

TABLE VII

Item Description	Accuracy Requirements	
Tube Tester I-177	Per TM 11-2627	
Multimeter TS-352/U	Per TM 11-5527	
D-C Millimeter	0.25 milliampere range	±0.5%
	1.0 milliampere range	±0.5%
	50 milliampere range	±0.5%
D-C Voltmeter	12.5 millivolt range	±0.5%
	0.25 volt range	±0.5%
	2.5 volt range	±0.5%
	10 volt range	±0.5%
	50 volt range	±0.5%
	500 volt range	±0.5%
RMS Voltmeter	Voltage range: 10 millivolt to 300 volts full scale in twelve ranges.	
	Decibel range: -72 to +52 dbm in twelve ranges	
	Frequency response: 10 cycles to 7 megacycles	
	Input impedance: 10 megohms shunted by 30μμf on ranges from 0.001 volt to 0.300 volt, 10 megohms shunted by 15μμf on ranges from 1.0 volt to 300 volts	
	Accuracy: ±1% of full scale 50 cps to 800 kilocycles	
Oscilloscope	Passband: dc to 30 megacycles	
	Calibrated deflection factor: .05 to 20 volts per centimeter.	
	Fastest sweep (magnified): 20 nanosecond per centimeter	
	Slowest sweep (calibrated): 5 second per centimeter, ±3% accuracy	

	Calibrated sweep magnifier:	5X	
	Cathode ray tube:	accelerating voltage 10 kilovolts	
	Vertical scale:	4 centimeter	
Test Resistors	100 K ohm	±1%	2 watt
	10 K ohm	±1%	1/2 watt
	1 K ohm	±1%	2 watt
	200 ohm	±1%	10 watt
	1 ohm	±1%	1/2 watt

45. Precautions

a. Careless replacement of parts often makes new faults inevitable. Note the following points:

(1) Before a part is unsoldered, note the position of the leads. Tag the leads to assure correct replacement.

(2) Do not allow drops of solder to fall into the test set. They may cause short circuits.

(3) Be careful in making soldered connections; faults due to poorly soldered joints are difficult to find.

(4) When a part is replaced in high gain circuits, it must be placed exactly as was the original one, since a part having the same electrical value but different physical location may cause trouble in high gain circuits. Give particular attention to proper grounding. Use the same ground as in the original wiring.

46. Power Supply Resistance Measurements

Trouble within the test set often may be detected by checking the resistance of the power supply circuit before applying power to the equipment. While the unit has a circuit breaker, affording protection from shorts, preliminary checks will prevent needless tripping of the circuit breaker.

a. Refer to Table VIII for resistances found at various power supply sockets and terminal boards.

WARNING

The test set must be turned off and must be disconnected from the power line.

Note: All of the resistance measurements are made between ground and the point mentioned in the table. All measurements are made with P105 and P503 disconnected. Measured values may differ from those given due to use of different ohmmeter scales and the effect of different ohmmeter supply voltages on the work function of semiconductors that may be in the circuits being tested.

TABLE VIII

Terminal No.	Measured on TB2101	Measured on TB2102
1	1850/840 *	1850/840 *
2	<.2	<.2
3	>20 meg	>20 meg
4	>20 meg	>20 meg
5	24.9/2000 *	.3
6	0	70/48 *
7	790/590 *	<.2
8	280/300 *	<.2

*Where two values are given the reason is ohmmeter test lead polarity effects on semiconductors. Reverse test leads to check for each value.

TUBES

Pin	XV1501 6AQ5	XV1502 6AQ5	XV1503 6AH6	XV1504 0B2	XV1505 0B2	XV1401 6S4	XV1402 6AH6	XV1403 0C2
1	>20 meg	>20 meg	NC	NC	NC	NC	>20 meg	NC
2	>20 meg	>20 meg	>20 meg	>20 meg	>20 meg	>20 meg	>20 meg	>20 meg
3	>20 meg	>20 meg	NC	NC	NC	>20 meg	>20 meg	NC
4	>20 meg	>20 meg	NC	NC	NC	>20 meg	>20 meg	NC
5	>20 meg	>20 meg	>20 meg	>20 meg	>20 meg	>20 meg	>20 meg	>20 meg
6	>20 meg	>20 meg	NC	NC	NC	NC	>20 meg	NC
7	NC	NC	NC	NC	NC	NC	NC	NC
8						NC		

47. Other Resistance Measurements

a. Refer to Table IX for resistances made at various other terminals and sockets.

WARNING

The test set must be turned off and must be disconnected from the power line.

Note: All of the resistance measurements are made between ground and the point mentioned in the table. All measurements are made with P105 and P503 disconnected. Measured values may differ from those given due to use of different ohmmeter scales and the effect of different ohmmeter supply voltages on the work function of semiconductors that may be in the circuits being tested.

TABLE IX

PIN	J401	J601	J901	J1001	J1101-A	J1101-B	J1201-A	J1201-B
1	440/830	NC	2580/2150	450/830	1310/1190	1600/700	680/500	660/480
2	NC	NC	KEY	5300	220/250	225/240	1490/820	1450/1100
3	NC	>20 meg	3850/1800	1.3 meg /830	1400/980	1400/1110	1600/710	1620/650
4	NC	>20 meg	240	NC	NC	NC	1450/580	1450/640
5	2150/4100	>20 meg	2550/2250	5300	1390/490	1400/600	1450/330	1450/660
6	NC	>20 meg	750/580	KEY	NC	NC	1400/500	1400/600
7	10K/2050	>20 meg	1730/2100	5200	NC	NC	1400/790	1425/1000
8	NC	>20 meg	650/480	380/4000	NC	NC	1620/1090	1610/1300
9	NC	>20 meg	3500/5500	2500/340	1420/790	1430/1000	1400/990	1380/1110
10	KEY	NC	NC	NC	1400/520	1450/580	NC	NC
11	220/240	NC	9100/2700	225/240	NC	NC	NC	100
12	160	NC	5400/1950	7800/200K	NC	2420	KEY	KEY
13	2500/330	>20 meg	2250/53K	140	1450/805	1440/1100	170	75
14	660/480	>20 meg	0	2500/350	NC	NC	0	0
15	1320/1180	>20 meg	265/300	650/490	NC	NC	2000/170	2000/170
16	NC	>20 meg	NC	NC	1450/580	1460/620	2000/170	2000/170
17	1250/2190	>20 meg	2400/53K	1260/2190	NC	6 meg /3100	2000/170	2000/170
18	NC	KEY	2250/53K	NC	NC	NC	2000/170	2000/170

PIN	J401	J601	J901	J1001	J1101-A	J1101-B	J1201-A	J1201-B
19	0	>20 meg	9300/2700	0	1610/1080	1610/1300	2000/170	2000/170
20	4K/1300	>20 meg	NC	4200/2300	1600/700	1610/650	2000/170	2000/170
21	760/570	NC	0	770/590	1600/700	1610/650	2000/170	2000/170
22	NC	>20 meg	4100/2100	NC	KEY	KEY	2000/170	2000/170
23	.25	NC	3850/1800	1250/700	0	0	2000/170	2000/170
24	NC	NC	5K/3650	NC	440/820	440/820	2000/170	2000/170

Where two values are given the reason is ohmmeter test lead polarity effects on semiconductors. Reverse test leads to check for each value.

PIN	J503	P503	J105	P105
A	290/310	1000/900	>20 meg	>20 meg
B	0	>20 meg	>20 meg	>20 meg
C	NC	NC	>20 meg	>20 meg
D	0	>20 meg	>20 meg	720
E	*7K/15 meg	46K/43K	>20 meg	>20 meg
F	0	46K/43K	>20 meg	2100/1200
H	>20 meg	>20 meg	>20 meg	>20 meg
J	>20 meg	>20 meg	>20 meg	1830/>20 meg
K	>20 meg	5K	>20 meg	1700/460
L	NC	NC	>20 meg	1500/>20 meg

PIN	J503	P503	J105	P105
M	0	>20 meg	240	1500/>20 meg
N	250	>20 meg	225	1330/145K
P	190	>20 meg	100	430
R	NC	NC	100	>20 meg
S	NC	NC	100	720
T	NC	NC	>20 meg/1220	0
U	NC	NC	>20 meg/1000	710
V	NC	NC	>20 meg	>20 meg
W	NC	NC	>20 meg	800
X	NC	NC	7900/910K	175
Y	*This value may change due		>20 meg	.5
Z	to different ohmmeter		>20 meg	1.3 meg
AA	scales and the effect of		>20 meg	>20 meg
BB	different ohmmeter supply		>20 meg	1300
CC	voltages on the work func-		>20 meg	350
DD	tion of semiconductors.		>20 meg	1050/>20 meg

Where two values are given the reason is ohmmeter test lead polarity effects on semiconductors. Reverse test leads to check for each value.

48. Operational Test

The following operational test, if conducted in a logical order will aid in localizing troubles in the system.

a. Power Control.

(1) Connect the power plug to either a 115 volt 60/400 cycle AC source or 230 volt 60/400 cycle source.

(2) Check that the CIRCUIT BREAKER is on and turn the POWER switch on. If 230 volts is used, observe that the blue pilot light is on. If 115 volts is used, press the 115 SELECT button, then observe that the blue pilot light is on. If the CIRCUIT BREAKER trips every time a short may exist in the power supply, use resistance check to locate trouble.

(3) Press the RESET button and observe that the yellow READY light is on. The stepper K1313 requires the closing of K1312 to move.

(4) The equipment shall be permitted to warm up for 2 minutes before any test is conducted.

b. Indicators.

(1) Place the LEADS switch into the KNOWN position, the AUTO-MANUAL-ADVANCE switch into the MANUAL position.

(2) Insert the INSPECTION TEST CARD #2 all the way into the punched card reader with the printed legend visible at the top facing out and push in the center button marked PUSH TO CLOSE on the card reader to close and latch it.

Note: The punched card reader should be closed and latched only when a test is to be conducted. Do not leave closed and latched for prolonged periods of time when no tests are being conducted. Always remove card when tests are being conducted.

(3) Press the TEST button and then momentarily press the AUTO-MANUAL-ADVANCE switch into the ADVANCE position and release. This will advance the stepper to test position 1.

(4) MANUAL-ADVANCE through test positions 1 through 12 and observe the operation of the following in each test position:

(a) The twelve (12) digit projector shall indicate each TEST NUMBER in proper sequence. Replace burned out bulbs.

(b) The NO-GO light shall light in test position 1. The A400 and A1000 plug-in boards generate the NO-GO signal for relay K1311.

(c) The GO light shall light in all test positions except 1.

(d) While in test position 1, move the TEST DATA-ACCEPTANCE LIMIT switch to the ACCEPTANCE LIMIT position. The OFF SCALE indicator shall light in addition to whatever two digit numerical readout appears. Neither decimal or left or right zero shall light. Readout requires proper operation of the A400, the two A1100 and two A1200 plug-in boards.

(e) Repeat the above test using the ACCEPTANCE LIMIT switch after MANUAL ADVANCE into test position 2, then MANUAL ADVANCE through to test position 8, conduct the above test, then MANUAL ADVANCE to test position 9 and repeat the above test. In positions 1, 2, 8, and 9, the OFF SCALE indicator shall light. In positions 8 and 9 the right hand zero shall light. The OFF-SCALE circuit uses Q1303, Q1304, and Q1305. Left and right zeros and two decimals are punched card program controlled by the closing of K1329 and K1330.

c. Automatic Lead Selector.

(1) RESET the test set to READY. Press the card release button under

the punched card reader and remove the inspection test card and replace with the IN-CIRCUIT PNP test card, for In-circuit test of PNP transistors. Move LEADS switch to UNKNOWN position and place a known good general purpose transistor of PNP polarity (such as a 2N404 or equivalent) into the TRANSISTOR test socket.

(2) Press the TEST button and within about 3 seconds the leads shall have been found and a GO light shall have lit. See Appendix VII for full description of the Automatic Lead Selector - In-Circuit Checker A100 module.

(3) RESET the test set to READY and place an external short between either the base and collector or the base and emitter of the transistor under test.

(4) Press the TEST button and within about 3 seconds the SHORT or LOW IMP light and the NO-GO light shall have lit. If the OPEN indicator lights, Q101 may have a collector to emitter short.

(5) RESET the test set to READY and change the location of the external short to be between the collector and emitter of the transistor under test.

(6) Press the TEST button and within about 3 seconds the NO GAIN light and the NO-GO light shall have lit. If the GO indicator lights, Q104 may have a collector to emitter short.

(7) RESET the test set to READY, remove the external short from the transistor under test. Remove any one lead of the transistor under test from the test socket allowing the other two leads to remain in place.

(8) Press the TEST button and within 3 seconds the OPEN light and the NO-GO light shall have lit. If the SHORT OR LOW IMP indicator lights, Q101 may have an open junction.

(9) RESET the test set to READY, remove the inspection test card and test transistor.

d. Projection Digital Voltmeter.

(1) With the test set turned OFF the strap wire between TB2101-1 (NEG) and TB2102-1 (POS) shall be removed and a milliammeter to measure 1.0 milliampere with a reading accuracy of at least plus or minus 0.5 percent inserted in its place. No inspection test card is required. With the test set turned ON, the meter should read 1.0 milliampere plus or minus 1 percent. Turn OFF the test set, remove the meter and replace the strap wire. (This checks the A300 1 ma regulator that is used to develop the programmed acceptance limits.)

(2) Place the LEADS switch in the KNOWN position, RESET to READY, insert the inspection test card #1. Insert a 100K ohm plus or minus 1 percent 2 watt test resistor between pins 5 and 1 of J104, the REMOTE ADAPTER (between collector and emitter using clip-lead adapter).

(3) MANUAL ADVANCE into test position 6. The A1600 power supply is programmed to 50 volts across the 100K ohm external resistor. The resultant 0.5 milliampere current flow develops 5 millivolts across the internal programmed 10 ohm measuring resistor in A700. This voltage is chopped by the chopper K1328. The use of a scaling amplifier A900 gain programmed to a value of 1,000 produces an output of 5 volts. The 5 volts is converted by the Readout Converter A400 to a group of 50 pulses, counted by

A1100, and A1200 and should produce a readout (including the programmed right hand zero) from 460 to 540. The GO light shall stay lighted because the programmed acceptance limit into the A1000 is greater than the measured value for this high limit test.

(4) Press the ACCEPTANCE LIMIT switch. The programmed acceptance value of 96 (9.6 volts into A400) shall produce a projection readout (including the programmed right hand zero) of from 930 to 990.

(5) Remove the one lead of the 100K ohm test resistor from pin 1 of J104 and connect to pin 3 of J104 (move from emitter clip to base clip using clip-lead adapter).

(6) MANUAL ADVANCE into test position 8. The A1600 supply is still 50 volts but the programmed internal measuring resistor is now 100 ohms which produces a 50 millivolt signal for the chopper K1328. The use of a scaling amplifier A900 gain programmed to a value of 100 should produce an output of 5 volts which will be converted to a readout (including the programmed left hand zero and decimal point) of from 0.46 to 0.54 by A400, A1100, and A1200 boards. The NO-GO light shall light because the programmed acceptance limit into A1000 was less than the measured value for this high limit test.

(7) Press the ACCEPTANCE LIMIT switch. The programmed acceptance value of 10 (1.0 volts into A400) shall produce a projection readout (including the programmed left hand zero and decimal point) of from 0.07 to 0.13.

(8) Remove the 100K ohm test resistor from between pins 5 and 3 of J104 (between collector and base using clip-lead adapter) and replace with

a 10K ohm plus or minus 1 percent 1/2 watt in the same location.

(9) MANUAL ADVANCE into test position 9. The A1600 supply is still 50 volts and internal measuring resistor 100 ohms, but the 10K ohm external test resistor allows 5 milliamperes to flow which develops 500 millivolts for the chopper. The use of a scaling amplifier A900 gain programmed to a value of 10 should produce an output of 5 volts which will be converted to a readout (including the center decimal point) of from 4.6 to 5.4. The NO-GO light shall light.

(10) Press the ACCEPTANCE LIMIT switch. The programmed acceptance value of 03 (0.3 volt to A400) shall produce a projection readout (including the center decimal point) of from 0.0 to 0.6.

(11) RESET the test set to READY, remove the inspection test card and the test resistor.

e. 0.25 to 50 Volt Programmable Supply, A1600

(1) With the test set turned ON, using LEADS KNOWN, insert the inspection test card #2. Place a power resistor of 200 ohms plus or minus 1 percent, with at least a 10 watt rating between pins 5 and 3 of J104 (between collector and base using clip-lead adapter).

(2) MANUAL ADVANCE into test position 9. A high input impedance voltmeter to measure 50 volts with a reading accuracy of at least plus or minus 0.5 percent shall be placed across the lugs of TB2101-5 (POS) and TB2102-5 (NEG). Observe the voltmeter reading while the RECHECK button is being held in. The programmed value of 50 volts should read within plus or minus 4 percent. The external 200 ohm test resistor has provided a 250 milliampere load. If the output is much greater than

55 volts, Q1602 and/or Q1604 may be shorted. Place the input probe of an oscilloscope across the voltmeter and set the oscilloscope controls to measure ripple. Observe the amplitude of the power supply ripple, as seen by the oscilloscope across the voltmeter while the RECHECK button is being held in. It should not exceed 0.1 volt peak-to-peak ripple.

(3) Remove the external 200 ohm test resistor and the oscilloscope probe.

(4) While still in position 9, observe the voltmeter. The value of voltage previously measured in (2) above should not have changed by more than plus or minus 1 percent by going to no-load.

(5) RESET the test set to READY and remove the inspection test card and external voltmeter.

f. 50 to 505 Volt Programmable Supply, A1400 and A1500

(1) A high input impedance voltmeter to measure 50 volts with a reading accuracy of at least plus or minus 0.5 percent shall be placed between TB2101-4 (POS) and TB2102-4 (NEG). Place a 10K ohm plus or minus 1 percent 1/2 watt test resistor between pins 5 and 3 of J104 (between collector and base using clip-lead adapter). With the test set turned ON, using LEADS KNOWN, insert the inspection test card #3.

(2) MANUAL ADVANCE into test position 8 and observe the voltmeter mentioned in (1) above. The programmed value of 50 volts should read within plus or minus 2 percent while the RECHECK button is being held in (to provide a 5 milliampere load). Remove the 10K ohm external test resistor and when the RECHECK button is being held in (no-load to the supply), the voltage read on the voltmeter should not change by more than plus or

minus 2 percent of the previous reading at a 5 milliampere load for the programmed value. This has checked out the programming and voltage choice relay K1309.

(3) Remove and replace the voltmeter specified in (1) above. Place on TB2101-3 (POS) and TB2102-4 (NEG) with a voltmeter to measure 495 volts with a reading accuracy of at least plus or minus 0.5 percent. Place a 100K ohm plus or minus 1 percent 2 watt external test resistor between pins 5 and 3 of J104 (between collector and base using clip-lead adapter). Place the input probe of an oscilloscope across the 100K ohm test resistor and set the oscilloscope controls to measure ripple.

(4) MANUAL ADVANCE into test position 9 and observe the new voltmeter mentioned in (3) above. The programmed value 495 volts should be read within plus or minus 3 percent while the RECHECK button is being held in (to provide a 5 milliampere load). This has checked the A1500 supply programmed to 270 volts connected in series aiding by K1308 with the A1400 fixed 225 volt regulated supply. Observe the amplitude of the power supply ripple, as seen by the oscilloscope across the 100K test resistor while the RECHECK button is held in. It should not exceed 5.0 volt peak-to-peak ripple.

(5) RESET the test set to READY, remove the inspection test card, test resistor, voltmeter, and oscilloscope probe.

g. Programmable Regulated Current Supply, A1900

(1) With the test set turned OFF, switch to LEADS KNOWN and insert the inspection test card #4. The strap wire between TB2102-2 (NEG) and TB2101-2 (POS) shall be removed and a milliammeter to measure 50 milliamperes

with a reading accuracy of at least plus or minus 0.5 percent in series with a 1K ohm plus or minus 1 percent 2 watt test resistor inserted in its place. Across the 10K ohm test resistor, place the probe of an oscilloscope and set the controls to measure ripple (scope ground lead at negative end). Turn the test set ON and MANUAL ADVANCE into test position 8. Place an external short between pins 5 and 3 J104 (between collector and base using clip lead adapter). MANUAL ADVANCE into position 10.

(2) Press RECHECK button while still in position 10 and observe the milliammeter mentioned in (1) above. The programmed value of 50 milliamperes should read within plus or minus 2 percent. This checks out the programming of and correct connections to the A1900 current supply through K1325. Observe the amplitude of the current supply ripple, as seen by the oscilloscope across the 1K test resistor while the RECHECK button is held in. It should not exceed 0.25 volts peak-to-peak ripple.

(3) While still in position 10, remove the oscilloscope probe and short out the 1K ohm test resistor, that is in series with the milliammeter.

(4) Press RECHECK button while still in position 10 and observe on the milliammeter that the reading has not changed by more than plus or minus 1 percent of the reading first obtained in (2) on previous page. Remove external collector to base short.

(5) RESET the test set to READY, turn OFF the test set, remove the inspection test card, 1K ohm test resistor, and the milliammeter.

h. h_{fe} (AC Beta) Test Circuit, A500

(1) With the test set turned ON, using LEADS KNOWN, insert the inspection test card #5. Place a milliammeter to measure 0.25 milliamperes with

a reading accuracy of at least plus or minus 0.5 percent in series with a 100K ohm plus or minus 1 percent 2 watt test resistor between pins 3 and 1 of J104 (between base (NEG) and emitter (POS) using clip-lead adapter). Across the 100K ohm test resistor, place the input connections of a 1 percent accurate RMS voltmeter with the meter ground lead on the emitter lead.

(2) MANUAL ADVANCE into test position 1 and observe the RMS voltmeter mentioned in (1) above while pressing the RECHECK button. The programmed value of 0.2 microamperes peak-to-peak AC base drive should read an RMS voltage of 7.07 millivolts plus 2 percent or minus 4 percent. This checks out the generation of and programming of the 1 Kc base drive signal from the A500 module. Observe the value of current on the milliammeter while pressing the RECHECK button. The value of emitter-to-base current should not exceed 0.25 milliamperes for this PNP polarity test. This checks that the A1900 programmable regulated current supply is correctly programmed and operating and is feeding proper polarity signals through the NPN-PNP relay K1325 to the correct test leads.

(3) Replace the RMS voltmeter with an oscilloscope input probe.

(4) While still in position 1, press the RECHECK button, and observe that the AC signal, as seen on the oscilloscope, is a 1,000 cycles per second plus or minus 2 percent signal. This checks the oscillator portion of A500.

(5) Remove the 100K ohm test resistor, oscilloscope input probe and milliammeter. Place a 10K ohm plus or minus 1 percent 1/2 watt test resistor between pins 3 and 5 of J104 (between base (POS) and collector

(NEG) using clip-lead adapter) and across the 10K ohm test resistor, place the leads of a voltmeter to measure 10 volts with a reading accuracy of at least plus or minus 0.5 percent.

(6) MANUAL ADVANCE into test position 2 and observe the voltmeter while pressing the RECHECK button. The programmed value of base-to-collector voltage should read 10 volts plus or minus 4 percent for this PNP polarity test. This checks that the A1600 power supply is correctly programmed and operating and is feeding proper polarity signals through the NPN-PNP relay K1325 to the correct test leads.

(7) Remove the inspection test card and reverse the polarity of the voltmeter. Replace with inspection test card #3. Press the RETEST button and observe that the voltage as programmed on this test card for NPN polarity is now 2.5 volts plus or minus 0.2 volts.

(8) RESET the test set to READY, and remove the inspection test card, the 10K ohm test resistor and the voltmeter. Replace with inspection test card #4.

i. h_{FE} (pulse) (DC Beta) Test Circuit, A600

(1) With the test set turned ON, using LEADS KNOWN, insert the inspection test card #4. Place a 1 ohm plus or minus 1 percent 1/2 watt test resistor between pins 3 and 1 of J104 (between base and emitter using clip-lead adapter) across the 1 ohm test resistor place the input probe of an oscilloscope (ground lead on EMITTER clip-lead) and set the oscilloscope controls to measure pulse base drive. Place a DC voltmeter to measure 2.5 volts with a reading accuracy of at least plus or minus 0.5 percent between

pins 1 and 5 of J104 (between emitter (POS) and collector (NEG) using clip-lead adapter).

(2) MANUAL ADVANCE into test position 3 and observe the oscilloscope mentioned in (1) above while pressing the RECHECK button. The programmed value of 1 ampere pulse base drive should read on the oscilloscope as a negative deflection equivalent to 1 volt plus or minus 3 percent for this PNP polarity test. The pulse width shall be observed on the oscilloscope as being between 275 microseconds and 425 microseconds at the 50 percent voltage point. The pulse repetition rate shall be observed on the oscilloscope as being between 25 cycles per second and 45 cycles per second. This checks out the generation of, and programming of the pulse base drive from the A600 plug-in board. The polarity is correctly obtained by the NPN-PNP relay K1327. While pressing the RECHECK button, the voltmeter mentioned in (1) above should be observed. The programmed value of 2.5 volts collector-to-emitter voltage should read within plus or minus 0.2 volts for this PNP polarity test. This checks out the programming of and correct connections to the A1600 power supply through K1325.

(3) Remove the inspection test card and reverse the polarity of the voltmeter. Replace with inspection test card #3. Press the RETEST button and observe that the oscilloscope deflection is still the same amplitude but now a positive deflection for NPN polarity and that the voltmeter reading for NPN polarity is the same value as above.

(4) RESET the test set to READY, remove the inspection test card, the voltmeter and test resistor.

j. h_{FE} (DC Beta) Test Circuit, A700

(1) With the test set turned ON, using LEADS KNOWN, RESET the test set to READY. Insert the inspection test card #5. Place a voltmeter to measure 12.5 millivolts with a reading accuracy of at least plus or minus 0.5 percent between pins 3 and 1 of J104 (between base (NEG) and emitter (POS) using clip-lead adapter). Place a 10K ohm plus or minus 1 percent 1/2 watt test resistor in parallel with the voltmeter between pins 3 and 1 of J104 (between base and emitter using clip lead adapter). Place another 10K ohm plus or minus 1 percent 1/2 watt test resistor between pins 1 and 5 of J104 (between emitter and collector using clip-lead adapter).

(2) MANUAL ADVANCE into test position 6 and observe the projection digital voltmeter readout. The A1600 programmed value of 10 volts emitter-to-collector voltage across the 10K ohm test resistor in series with the programmed internal measurement resistor of 80 ohms from A700 is chopped by K1328 and the programmed scaling amplifier gain of X100 should produce a readout from 75 to 85. While pressing the RECHECK button, observe the voltmeter mentioned in (1) above. The programmed value of 1.25 microamperes base drive current should read within plus or minus 3 percent of 12.5 millivolts across the 10K test resistor.

(3) RESET the test set to READY, remove the inspection test card, the test resistor and voltmeter.

k. Current for a Voltage Test Circuit, A800

(1) With the test set turned ON, using LEADS KNOWN, insert the inspection

test card #6. Place an external short between pins 5 and 3 of J104 (between collector and base using clip-lead adapter).

(2) MANUAL ADVANCE into test position 7 and observe the projection digital voltmeter presentation. The A1600 programmed value of 5 volts across the programmed internal measuring resistor of 100 ohms from A800 is chopped by K1328, and the scaling amplifier gain programmed to a gain of X1 places 5 volts into A400, A1100, and A1200 and should produce a reading of from 47 to 53.

(3) RESET the test set to READY, remove the inspection test card and external short.

l. Voltage for a Current Test Circuit, A2000

(1) With the test set turned ON, using LEADS KNOWN, insert the inspection test card #6.

(2) MANUAL ADVANCE into test position 11 and observe the projection digital voltmeter presentation. The programmed value of 0.75 milliamperes (using the A1900 current supply and A1500 voltage supply in series) through the internal test resistor produces a voltage which is divided 10:1 and is presented as a projection readout of from 71 to 79.

(3) RESET the test set to READY, remove the inspection test card.

m. Zener Impedance Test Circuit, A2000

(1) With the test set turned ON, using LEADS KNOWN, insert the inspection test card #7. Place a 200 ohm plus or minus 1 percent 10 watt resistor between pins 3 and 5 of J104 (between base and collector using clip-lead adapter).

(2) MANUAL ADVANCE into test position 12 and observe the projection digital voltmeter presentation. The readout shall be from 160 to 240. This checks that K2003 has placed a 1 ma peak-to-peak ripple on the A1900 current regulator. A voltage of 200 millivolts peak-to-peak AC appears across the external test resistor which is coupled into the scaling amplifier A900 which is programmed to a gain of X10. The 2.0 volt output is converted by A400 to twenty (20) pulses and read by A1100 and A1200 to produce the readout. The programmed right hand zero is due to closing K1329.

(3) RESET the test set to READY, remove the inspection test card, and test resistor.

Note: Always remove test card upon completion of a test. Never leave a test card in the card reader for prolonged periods of time when no tests are being conducted.

49. Troubleshooting Table

Reference is made to the Troubleshooting Table V for data on simple troubles. Table X below indicates more involved system troubles.

TABLE X

Unit	Malfunction	Probable Cause
A-300	No Regulation and non-adjustable	Shorted Q301
A-1400	Non-adjustable	Weak or malfunctioning V1403 or V1402
	Poor Regulation	Weak V1401 or V1402
A-1500	Non-Adjustable	Weak or malfunctioning V1503, V1504 or V1505

	Poor Regulation	Weak V1501, V1502 or V1503
A-1600	Non-adjustable or NO regulation	Weak Q1605 or shorted Q1601, Q1602, Q1603 or Q1604
A-1700	Non-adjustable or NO regulation	Shorted Q1701, Q1702 or weak Q1703
A-1800	Incorrect -12V, -13V or +8V	Bad Q1801 or CR1809
A-1900	Non-adjustable or NO regulation	Weak Q1903 or shorted Q1901, Q1902, Q1904 or Q1905

Section III LUBRICATION AND PAINTING

50. Lubrication

a. Stepping Switches K1313 and K102. Lubrication is per the instructions in Appendix II.

b. Cooling Fan is permanently lubricated and sealed; DO NOT attempt lubrication.

c. No other part of the test set requires lubrication.

51. Painting

Instructions for the preparation of the materiel for painting, methods of painting, and materials to be used are contained in TM 9-2851.

Section IV CALIBRATION

52. General

The following calibration procedures will be performed as required. The order may be changed, if required. Reference should be made to the

schematic drawings in Appendix III and test circuits of Appendix IV.

53. Test Equipment Required for Complete Calibration

a. The test equipment for complete calibration of the test set AN/USM-136 when using the test set for its own power and signal supply accuracy requirements for the test equipment are also listed.

TABLE XI

Item Description	Accuracy Requirements	
Vacuum Tube Voltmeter (VTVM)	Input Impedance higher than 500K ohms, having the following ranges:	
	225 volt range	±0.5%
	50 volt range	±0.5%
	10 volt range	±0.5%
D-C Milliammeter	0.25 milliampere range	±0.5%
	1.0 milliampere range	±0.5%
	10 milliampere range	±0.5%
	50 milliampere range	±0.5%
D-C Voltmeter	12.5 millivolt range	±0.5%
	0.25 volt range	±0.5%
	2.5 volt range	±0.5%
	10 volt range	±0.5%
	25 volt range	±0.5%
	50 volt range	±0.5%
	500 volt range	±0.5%
RMS Voltmeter	Voltage range: 10 millivolt to 300 volts full scale in twelve ranges Decibel range: -72 to +52 dbm in twelve ranges Frequency response: 10 cycles to 7 megacycles Input impedance: 10 megohms shunted by 30μμf on ranges from 0.001 volt to 0.300 volt, 10 megohms shunted by 15μμf on ranges from 1.0 volt to 300 volts. Accuracy: ±1% of full scale 50 cps to 800 kilocycles	
Oscilloscope	Passband: DC to 30 megacycles Calibrated deflection factor: .005 to 20 volts per centimeter	

TABLE XI (cont.)

Item Description	Accuracy Requirements		
	Fastest sweep (magnified):	20 nanosecond per centimeter	
	Slowest sweep (calibrated):	5 second per centimeter, ±3% accuracy	
	Calibrated sweep magnifier:	5X	
	Cathode ray tube:	accelerating voltage 10 kilovolts	
	Vertical scale:	4 centimeters	
Test Resistors	100K ohm	±1%	2 watt
	10K ohm	±1%	1/2 watt
	5K ohm	±5%	1 watt
	1K ohm	±1%	2 watt
	200 ohm	±1%	10 watt
	100 ohm	±1%	1/2 watt
	10 ohm	±1%	1/2 watt
	1 ohm	±1%	1/2 watt
	20 ohms	±5%	10 watt
	11K ohms	±5%	10 watt
	120 ohms	±5%	10 watt

b. If it is desired to perform the calibration of the plug-in sub-assemblies without the use of the power supply and signals from the test set, AN/USM-136, the following additional test equipment is required as listed in Table XII.

TABLE XII

Item Description	Accuracy Requirements
Power Supply	Negative 28 volts plus or minus 10 percent, current rating greater than or equal to 500 milliamperes, peak-to-peak ripple less than 1 volt, output impedance less than 10 ohms from DC to 20 kilocycles.
Power Supply	Negative 24 volts plus or minus 1 percent, current rating greater than or equal to 100 milliamperes, peak-to-peak ripple less than 0.05 volt, output impedance less than 2 ohms from DC to 500 kilocycles.

TABLE XII (Cont.)

Item Description	Accuracy Requirements
Power Supply	Negative 12 volts plus or minus 1 percent, current rating greater than or equal to 50 milliamperes, peak-to-peak ripples less than 0.05 volt, output impedance less than 2 ohms from DC to 500 kilocycles.
Power Supply	Positive 8 volts plus or minus 5 percent, current rating greater than or equal to 100 milliamperes, peak-to-peak ripple less than 0.05 volt, output impedance less than 2 ohms from DC to 500 kilocycles.
Power Supply	Positive 12 volts plus or minus 1 percent, current rating greater than or equal to 50 milliamperes, peak-to-peak ripple less than 0.05 volt, output impedance less than 2 ohms from DC to 500 kilocycles.
Power Supply	Positive 24 volts plus or minus 1 percent, current rating greater than or equal to 100 milliamperes, peak-to-peak ripple less than 0.05 volt, output impedance less than 2 ohms from DC to 500 kilocycles.
Pulse Generator	Reset Pulse generator of negative 3 volts having a rise time of no greater than 1 microsecond and a pulse width 25 microseconds wide at the half voltage point.
Pulse Generator	Trigger Pulse generator of negative 1.5 volts having a rise time of no greater than 1 microsecond and a pulse width 15 microseconds wide at the half voltage point.
Square Wave Generator	Input Square Wave generator of 7 volt amplitude having a positive going rise time of no greater than 1 microsecond and a variable frequency range of from 50 kilocycles to less than 5 kilocycles.
Signal Generator	DC Input Signal continuously variable from positive 0.1 volts to positive 10 volts having a 1.2 microfarad capacitor across its output terminals.
Signal Generator	AC Input Signal continuously variable from 0.0001 volt peak-to-peak to 10 volts peak-to-peak, 60 cycles per second square wave having rise and fall times not to exceed 2 microseconds.

54. Regulated 1 ma Current Supply, A300 - Schematic Dwg. #B8625370

a. With the test set turned OFF, switch to LEADS KNOWN, and insert the inspection test card #2. The strap wire between TB2102-1 (POS) and TB2101-1 (NEG) shall be removed and a milliammeter to measure 1.0 milliamperes with an accuracy of plus or minus 0.5 percent inserted in its place. Turn the test set ON and MANUAL ADVANCE to Test Position 1. Adjust potentiometer R304 until current is 1.0 milliamperes.

b. Remove inspection test card #2 and RESET the test set to the READY position. The current should be 1.0 plus or minus 0.01 milliamperes.

c. Turn the test set OFF, remove the milliammeter and replace the jumper between TB2102-1 and TB2101-1.

55. Programmed 0.25 to 50 Volt Power Supply, A1600 - Schematic Dwg. #C8625376

a. With the test set turned ON, switch to LEADS KNOWN, insert inspection test card #5 and MANUAL ADVANCE to position #1. A high imput impedance voltmeter (VTVM) to measure 10V with an accuracy of plus or minus 0.5 percent shall be placed across terminals TB2101-5 (POS) and TB2102-5 (NEG). A voltmeter to measure a DC voltage of under 10V shall be placed across terminals TB2101-5 and K1303-4.

b. Adjust potentiometer R1612 to obtain a VTVM reading of 10.0 volts.

c. Adjust potentiometer R1613 to obtain a voltmeter reading of 0.0V.

d. Repeat steps b. and c. until no further adjustment is required. Remove the voltmeter from between TB2101-5 and K1303-4.

e. Place a 20 ohm, plus or minus 5 percent, 10 watt resistor across the VTVM and observe the reading. The voltage should be 10.0 plus or minus 0.2V.

f. Remove the resistor, VTVM, inspection test card and RESET the test set to READY.

g. Insert the inspection test card #2. Place an external short between pins 5 and 3 of J104 (between collector and base using clip-lead adapter).

h. MANUAL ADVANCE into test position 8. A voltmeter to measure 0.25 volts with a reading accuracy of at least plus or minus 0.5 percent shall be placed across the lugs of TB2101-5 (POS) and TB2102-5 (NEG). Observe the voltmeter reading. The programmed value of 0.25 volts should read within plus or minus 0.2 volt while the RECHECK button is being held in (to provide a 250 milliampere load). When the RECHECK button is released (no-load to the supply) the voltage read on the voltmeter should not increase by more than 0.1 volt over the previous reading at a 250 milliampere load. When the line voltage is varied by plus or minus 10 percent while the RECHECK button is held in, the voltage read on the voltmeter should not change by more than plus or minus 0.1 volt of the previous reading.

i. Remove and replace the voltmeter mentioned in h. above on the same lugs with a voltmeter to measure 50 volts with a reading accuracy of at least plus or minus 0.5 percent. Place the input probe of an oscilloscope across the voltmeter and set the oscilloscope controls to measure ripple. Remove the external short mentioned in h. above and replace with a power resistor of 200 ohms plus or minus 1 percent, with at least a 10 watt rating.

j. MANUAL ADVANCE into test position 9 and observe voltmeter while the RECHECK button is being held in. The programmed value of 50 volts should read between 48 volts and 52 volts. The external 200 ohm test resistor

has provided a 250 milliampere load. When the line voltage is varied by plus or minus 10 percent, the voltage read on the voltmeter should not change by more than plus or minus 1 volt of the previous reading. Observe the amplitude of the power supply ripple, as seen by the oscilloscope across the voltmeter while the RECHECK button is being held in. It should not exceed 0.1 volt peak-to-peak ripple, as seen by the oscilloscope across the voltmeter while the RECHECK button is being held in. It should not exceed 0.1 volt peak-to-peak ripple.

k. Remove the external 200 ohm test resistor and the oscilloscope probe. Observe the voltmeter. The value of voltage previously measured in j. above should not have changed by more than plus or minus 1 percent by going to no-load.

l. RESET the test set to READY and remove the inspection test card and external voltmeter.

56. Fixed High Voltage Power Supply, +225V, A1400 - Schematic Dwg. #C8625375

a. With the test set turned OFF, connect across the terminals TB2101-3 (POS) and TB2102-3 (NEG) a high input impedance voltmeter to measure 225 volts with an accuracy of plus or minus .5 percent. Turn ON the test set and allow a five (5) minute warm-up time. Observe the voltmeter reading after the warm-up. Adjust the potentiometer R1406 until the voltage is 225 volts.

b. Turn OFF the test set and connect across the voltmeter terminals a 11K ohm, plus or minus 5 percent, 10 watt resistor. Turn the test set ON and observe the voltmeter reading. The voltage should be 225 plus or minus 2.25 volts.

c. Turn the test set OFF and disconnect the external test resistor and voltmeter from the terminals.

57. Programmed High Voltage Power Supply, A1500 - Schematic DWG. #C8625377

a. With the test set turned OFF switch to LEADS KNOWN and insert the inspection test card #3. Turn ON the test set and MANUAL ADVANCE to position #8. Allow at least 5 minutes for warm-up time.

b. A high input impedance voltmeter (VTVM) to measure 50 volts with an accuracy of plus or minus 0.5 percent shall be placed across terminals TB2101-4 (POS) and TB2102-4 (NEG) a voltmeter to measure a DC voltage of under 20 volts shall be placed across terminal TB2102-4 and K1309-6.

c. Adjust potentiometer R1514 to obtain a VTVM reading of 50.0 volts.

d. Adjust potentiometer R1513 to obtain a voltmeter reading of 0.0V.

e. Repeat steps c. and d. until no further adjustments are required. Remove the voltmeter.

f. Place a 1,000 ohm, plus or minus 1 percent, 2 watt resistor across the VTVM terminals and observe the VTVM. The voltage should be 50.0 volts plus or minus 1.0 volts.

g. Remove the test resistor and VTVM and insert a voltmeter to measure 495 volts with an accuracy of plus or minus 5 percent across TB2101-3 (POS) and TB2102-4 (NEG). MANUAL ADVANCE into position 9 and observe the voltmeter. The voltage should be 495 volts plus or minus 10 volts.

h. Remove the voltmeter, RESET the test set to READY, and remove the inspection test card. Insert the prepunched program card for a 1N486A diode and MANUAL ADVANCE to position 9. Place a high impedance voltmeter to measure 225 volts with an accuracy of plus or minus 0.5 percent across

terminals TB2101-4 (POS) and TB2102-4 (NEG) and observe the voltmeter reading. The voltage should be 225 volts plus or minus 2.5 volts.

i. Place a 11K ohm, plus or minus 5 percent, 10 watt resistor across the voltmeter terminals and observe the voltmeter. The voltage should be 225 volts plus or minus 3.5 volts.

j. Remove the resistor, voltmeter, prepunched program card and RESET the test set to READY.

58. Regulated Current Supply, A1900 - Schematic Dwg. #C8625363

a. With the test set turned OFF, switch to LEADS KNOWN and insert the inspection test card #7. The strap wire between terminals TB2102-2 (NEG) and TB2101-2 (POS) shall be removed and a milliammeter to measure 10 ma with an accuracy of plus or minus 0.5 percent in series with a 1K ohm, plus or minus 1 percent, 2 watt test resistor inserted in its place. Turn the test set ON and MANUAL ADVANCE into test position 8. Place an external short between pins 5 and 7 on J104 (between collector and base using clip-lead adapter) and MANUAL ADVANCE into test position 10. Press the RECHECK button while still in position 10 and observe the milliammeter reading. Adjust the potentiometer R1909 until the meter reads 10.0 milliamperes.

b. Replace the 1K ohm test resistor with a 5K ohm, plus or minus 5 percent, 1 watt test resistor. Press the RECHECK button and observe the ammeter reading. The current should be 10.0 plus or minus .1 milliamperes.

c. Short out the 5K ohm test resistor and observe the milliammeter. The current should be 10.0 plus or minus 0.1 milliamperes. RESET the test set to READY, turn OFF the test set and remove the inspection test card, 5K ohm test resistor, and milliammeter.

d. With the test set turned OFF, switch to LEADS KNOWN and insert the inspection test card #4. The strap wire between TB2102-2 (NEG) and TB2101-2 (POS) shall be removed and a milliammeter to measure 50 milliamperes with a reading accuracy of at least plus or minus 0.5 percent in series with a 1K ohm plus or minus 1 percent, 2 watt test resistor inserted in its place. Across the 1K ohm test resistor, place the probe of an oscilloscope and set the controls to measure ripple (scope ground lead at negative end). Turn the test set ON and MANUAL ADVANCE into test position 8. Place an external short between pins 5 and 3 of J104 (between collector and base using clip-lead adapter). MANUAL ADVANCE into position 10.

e. Press RECHECK button while still in position 10 and observe the milliammeter mentioned in d. above. The programmed value of 50 milliamperes should read within plus or minus 2 percent. While still holding the RECHECK button in, vary the line voltage plus or minus 10 percent and observe that the current as read by the milliammeter does not change by more than plus or minus 1 percent of the previous reading. Observe the amplitude of the current supply ripple, as seen by the oscilloscope across the 1K test resistor while the RECHECK button is held in. It should not exceed 0.25 volts peak-to-peak ripple.

f. While still in position 10, remove the oscilloscope probe and short out the 1K ohm test resistor, that is in series with the milliammeter.

g. Press RECHECK button while still in position 10 and observe on the milliammeter that the reading has not changed by more than plus or minus 1 percent of the reading first obtained in e. above. Remove external collector to base short.

h. RESET the test set to READY, turn OFF the test set, remove the inspection test card, 1K ohm test resistor, and the milliammeter. Insert inspection test card #5, and place a milliammeter to measure 0.25 milliamperes with a reading accuracy of at least plus or minus 0.5 percent between TB2102-2 (NEG) and TB2101-2 (POS). Turn the test set ON and MANUAL ADVANCE to test position 8. Place an external short between pins 5 and 3 of J104 (between collector and base using clip-lead adapter). MANUAL ADVANCE into test position 11.

i. Press RECHECK button while still in position 11 and observe the milliammeter mentioned in h. above. The programmed value of 0.25 milliamperes should read within 0.05 milliamperes. RESET the test set, turn OFF the test set, and remove the inspection test card, and milliammeter.

j. Insert inspection test card #7 and place a 1K ohm, plus or minus 1 percent, 2 watt resistor between terminals TB2102-2 (NEG) and TB2101-2 (POS). Turn ON the test set and MANUAL ADVANCE to test position 8. Place an external short between pins 5 and 3 of J104 (between collector and base using clip-lead adapter). MANUAL ADVANCE to position 12. Place an oscilloscope probe across the 1K ohm test resistor with the ground lead at terminal TB2102-2. The AC voltage measured on the scope should be 1.0 volt plus or minus 0.05 volt peak-to-peak.

k. RESET the test set to READY, turn the test set OFF, remove the inspection test card, the external short and milliammeter, replace the strap wire.

59. Plus or Minus 24 Volt Service Supply, A1700 - Schematic Dwg. #C8625323

a. With the test set turned OFF, disconnect the plus 24 volts and J1001-21 leads from TB2101-7 leaving the lead to CR1701-A remaining. Disconnect the

minus 24 volts and J901-15 leads from TB2101-8 leaving the lead to R1707 remaining. Also remove the two (2) A1200, Light Driver, printed wiring boards from the test set.

b. Connect a voltmeter to measure 24 volts with an accuracy of plus or minus 0.5 percent across Terminals TB2101-7 (POS) and TB2102-7 (NEG). Connect across the voltmeter a 120 ohm, plus or minus 5 percent, 10 watt resistor. Turn ON the test set and observe the voltmeter reading. Adjust potentiometer R1704A until the voltmeter indicates 24.0 volts.

c. Turn OFF the test set, remove the 120 ohm resistor.

d. Remove the voltmeter from the terminals and insert it across terminals TB2101-8 (NEG) and TB2102-8 (POS). Connect across the voltmeter a 120 ohm, plus or minus 5 percent, 10 watt resistor. Turn ON the test set and observe the voltmeter reading. Adjust potentiometer R1704B until the voltmeter indicates 24.0 volts.

e. Turn OFF the test set, remove the voltmeter and 120 ohm resistor, and replace the two (2) A1200 Light Driver, printed wiring boards and the leads that had been removed from TB2101-7 and TB2101-8 in step a.

60. Supplementary Power Supply, A1800 - Schematic Dwg. #C8625365

This is a supplementary power supply which requires no calibration or adjustments. Measurements are made to determine if the circuits are operating properly and if out of tolerance measurements are obtained, refer to paragraph 49 and Trouble-Shooting chart.

a. A voltmeter to measure 50 volts with an accuracy of plus or minus 1 percent shall be connected to terminals TB2102-6 (NEG) and TB2101-6 (POS). Turn the test set ON and observe the voltmeter reading. The voltage should be 35 volts plus or minus 5 volts. Disconnect the voltmeter.

b. Connect the positive terminal of the voltmeter to terminal J601-22.

(1) Connect the negative terminal of the voltmeter to terminal K1327-6 and observe the reading. The voltage should be 12.5 volts plus or minus 1.0 volts.

(2) Connect the negative terminal of the voltmeter to terminal J601-16 and observe the reading. The voltage should be 13 volts plus or minus 1 volt. Disconnect the voltmeter.

c. Connect the negative terminal of the voltmeter to terminal J601-22. Connect the positive terminal of the voltmeter to terminal J601-20 and observe the reading. The voltage should be 8 volts plus or minus 1.5 volts. Disconnect the voltmeter.

61. Readout Converter, A400 - Schematic Drawing #D8625316

a. Insert the plug-in subassembly Readout Converter, (A400) into the test circuit of Appendix IV, Figure a and connect the power supplies and other items of test equipment as indicated (or test while installed in the Transistor Test Set AN/USM-136). Turn ON the power and allow a 2 minute warm-up period.

b. A DC positive voltage of 10.0 volts from a low impedance source (such as a 1μf capacitor) shall be applied on input pin 28 of J401. Apply a negative 3.0 volt reset pulse 25 microseconds wide at the half voltage point to pin 1.

Note: If A400 is installed in the transistor test set, then an inspection test card can be used and the ACCEPTANCE LIMIT which is programmed for the desired test VOLTAGE can supply the input voltage as a readout check to see if A400 is set up correctly. Example:

Inspection Test Card #1

Test Position	Acceptance Limits
5	50
6	96
8	10
9	03

c. Apply a negative 1.5 volt trigger pulse 15 microseconds wide at the half voltage point to pin 17 of J401.

Note: For ease of adjustment by viewing on a scope, an external repetitive trigger pulse of from 60 pps to 400 pps may be employed in place of the single trigger produced by the test set.

Observe on an oscilloscope connected to pin 20 that a positive going sawtooth pulse of 10 volts amplitude at a pulse width of 2.00 milliseconds plus or minus 0.02 milliseconds has been produced for each trigger application.

d. If waveshape does not appear correct as shown below, adjust R431 (STABILITY) until instability occurs at the 2.00 millisecond width then turn back until the waveform is just stable. Now adjust R402 (LINEARITY) to maintain the 2.00 millisecond width until just at the point of instability. Now return to R431 and readjust until stable. Now return to R402 until instability occurs, etc. until waveshape and time (width) of 2.00 milliseconds is REACHED. The projection readout of the test set (if used) should read 99, or 00 "off scale", or 01 "off-scale".

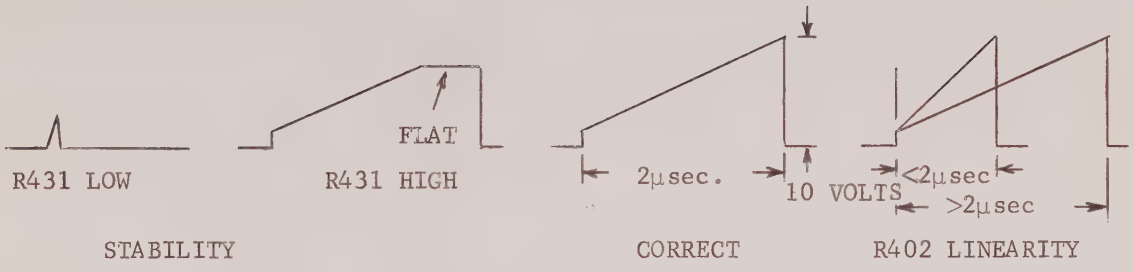

e. Observe on an oscilloscope connected to pin 13 that a positive going pulse of no less than 8 volts amplitude at a pulse width of 2.00 milliseconds plus or minus 0.02 milliseconds has been produced.

Note: The pulse will start at about minus 12 volts and step up to about minus 2 volts for about 2 milliseconds, then return to about minus 12 volts.

f. With the same input voltage, reset pulse, and trigger pulse, as in b. and c. above. Observe on an oscilloscope connected to pin 15 that a train of one hundred (100) pulses plus or minus 2 pulses at a 50 Kc rate of an amplitude of no less than 8 volts has been produced.

g. Change the input voltage to 1.0 volts, reset and trigger as above and observe on an oscilloscope connected to pin 15 that a train of ten (10) pulses plus or minus 1 pulse at a 50 Kc rate of an amplitude of no less than 8 volts has been produced. The projection readout of the test set (if used) should read 10 plus or minus 1 count.

h. With the same input voltage, reset and trigger as in g. above, observe on an oscilloscope connected to pin 13 that a positive going pulse of no less than 8 volts amplitude at a pulse width of 0.2 milliseconds plus or minus 0.02 milliseconds has been produced.

i. Change the input voltage to 0.3 volts, reset and trigger as in h. above and observe on an oscilloscope connected to pin 13 that a positive going pulse of no less than 8 volts amplitude at a pulse width of 0.06 milliseconds plus or minus 0.02 milliseconds has been produced.

j. With the same input voltage, reset and trigger as in i. above, observe on an oscilloscope connected to pin 15 that a train of three (3) pulses plus or minus 1 pulse at a 50 Kc rate of an amplitude of no less than 8 volts has been produced. The projection readout of the test set (if used) should read 03 plus or minus 1 count.

62. Comparison Converter, A1000 - Schematic Drawing #D8625320

a. Insert the plug-in subassembly, Readout Converter (A1000), into the test circuit of Appendix IV of Figure b and connect the power supplies and other items of test equipment as indicated (or test while installed in the Transistor Test Set AN/USM-136). Turn ON the power and allow a 2 minute warm-up period. Place the test switch SW-1 on the LOW LIMIT position to simulate LOW LIMIT position of relay K1001 in the test set.

Note: If A1000 is to be calibrated while still installed in the transistor test set, disconnect wire to J401-23 and transfer to J1001-23 removing any wire previously wired to J1001-23. Carefully lift the negative (-) terminal lead from C403 from the printed wiring board. Connect a jumper wire from J1001-14 to the negative (-) end of C403 that was disconnected from the printed wiring board. Now the ACCEPTANCE LIMIT can be used to check the actual count equivalent of waveshape generated during calibration.

b. A positive DC voltage of 10.0 volts from a low impedance source (such as a 1μf capacitor) shall be applied to the input pin 23 of J1001. Apply a negative 3.0 volt reset pulse, 25 microseconds wide at the half voltage point to pin 1.

Note: If A1000 is installed in the transistor test set, then an inspection test card can be used and the ACCEPTANCE LIMIT which is programmed for the desired test VOLTAGE can supply the input voltage as a readout check to see if A1000 is set up correctly. Example:

Inspection Test Card #1

Test Position	Acceptance Limits
5	50
6	96
8	10
9	03

c. Apply a negative 1.5 volt trigger pulse 15 microseconds wide at the half voltage point to pin 17 of J1001.

Note: For ease of adjustment by viewing on a scope, an external repetitive trigger pulse of from 60 pps to 400 pps may be employed in place of the single trigger produced by the test set.

Observe on an oscilloscope connected to pin 30 that a positive going saw-tooth pulse of no less than 10 volts amplitude at a pulse width of 2.00 milliseconds plus or minus 0.02 milliseconds has been produced for each trigger pulse, and note the value. The "NO-GO" bulb should light.

d. If waveshape does not appear correct as shown below, adjust R1033 (STABILITY) until instability occurs at the 2.00 millisecond width then

turn back until the waveform is just stable. Now adjust R1002 (LINEARITY) to maintain the 2.00 millisecond width until just at the point of instability. Now return to R1033 and readjust until stable. Now return to R1002 until instability occurs, etc. until waveshape and time (width) of 2.00 milliseconds is REACHED. The projection readout of the test set (if used) should read 99, or 00 "off-scale", or 01 "off-scale". Replace the wiring changes made in the "Note" of paragraph 62a.

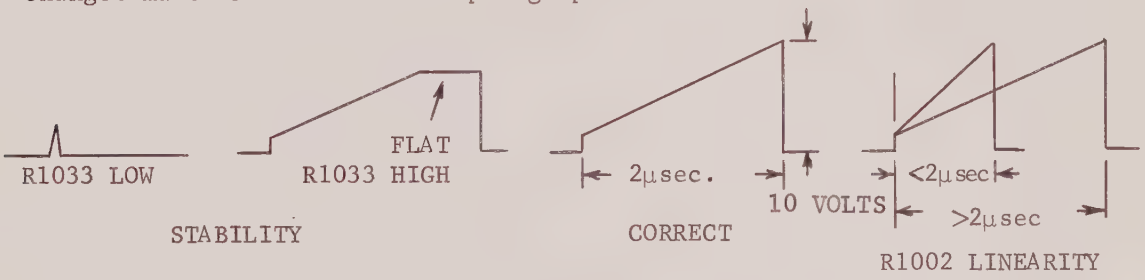

e. Observe on an oscilloscope connected to pin 14 that a positive going pulse of no less than 8 volts amplitude at a pulse width of 2.00 milliseconds plus or minus 0.02 milliseconds has been produced.

Note: The pulse will start at about minus 12 volts and step up to about minus 2 volts for about 2 milliseconds, then return to about minus 12 volts.

f. Repeat steps b. and c. but simultaneous with the application of the trigger pulse apply a pulse from the Readout Converter (A400) to pin 9 that is 20 microseconds longer than the pulse obtained in c. above. The "NO-GO" light should not light.

g. Place the test switch SW-1 on the HIGH-LIMIT position to simulate HIGH-LIMIT position of relay K1001 in the test set and remove the signal to pin 9.

h. Change the DC positive voltage on the input pin 23 to plus 1.0 volts, reset and trigger as above and observe on an oscilloscope connected to pin 14 that a positive going pulse of no less than 8 volts amplitude at a pulse width of 0.20 milliseconds plus or minus 0.02 milliseconds has been produced and note the value. The "NO-GO" light should not light.

i. Repeat step (f) but simultaneous with the application of the trigger pulse apply a pulse from the Readout Converter (A400) to pin 9, that is 20 microseconds longer than the pulse obtained in f. on previous page. The "NO-GO" light shall light.

j. Reapply the reset pulse.

k. Apply a negative "NO-GO" signal by closing the test switch SW-2 to simulate the signal from the Automatic Lead Selector - In-Circuit Checker (A100) module. Observe that the "NO-GO" light shall light.

63. Scaling Amplifier, A900 - Schematic Drawing #D8625591

a. Insert the plug-in subassembly, Scaling Amplifier (A900), into the test circuit of Appendix IV, Figure c and connect the power supplies and other items of test equipment as indicated (or test while installed in the Transistor Test Set AN/USM-136). Turn ON the power and allow a 2 minute warm-up period.

b. Ground pin 12 and pin 9. Looking at Test Point TP901 (collector of Q909), adjust Tailor resistor R917 so that voltage on TP901 is approximately minus 12 volts. Remove grounds from pins 9 and 12. Now adjust R901 (BALANCE) until same minus 12 volts appears on TP901 (collector of Q909).

c. Place the test switch SW-1 in the X1000 position, (connect pin 19 to pin 24 and pin 22 to pin 3 or energize relays K901 and K902 for gain equals X1000). Place a 10 millivolt peak-to-peak square wave from a Tektronix calibrator (or equivalent signal source) into pin 7, the input of the scaling amplifier. Observe with an oscilloscope Test Point TP901 (collector of Q909), adjust R927 (X1000 ADJ.) for a 10 volt peak-to-peak square wave.

d. With same set-up as in step c. on previous page, change the test switch SW-1 to X100, (connect pin 1 to pin 5 or energize relay K902 only for gain equals X100). Raise input level to 0.1 volt peak-to-peak square wave. Adjust R911 (X100 ADJ.) for 10 volts peak-to-peak square wave on TP901.

e. Change the test switch SW-1 to the X10 position, (disconnect pin 22 from pin 3, pin 1 from pin 5, leave connected pin 19 to pin 24 and also connect pin 3 to pin 23 (or energize relay K901 only for gain equals X10). Raise input to 1 volt peak-to-peak square wave and adjust R928 (X10 ADJ.) for 10 volts peak-to-peak square wave on Test Point TP901 (collector of Q909).

f. With the test switch SW-1 in the S1 position, apply an input signal of 10 volts 60 cycles per second square wave signal to the input capacitor C1313 (which is connected to Pin 7 of J901). The output DC voltage measured by a 10 volt voltmeter having an accuracy of plus or minus 0.5 percent connected to pin 21 of J901 shall read plus 10 volts plus or minus 2 percent.

g. A 1 megohm plus or minus 5 percent 1/2 watt test resistor shall be connected in series between the source of input voltage and the input capacitor C1313. Repeat test f. above and note that the voltage read on the DC output voltmeter shall be greater than half of the value measured during test f.

h. Remove the 1 megohm test resistor and reconnect the input capacitor C1313.

64. h_{fe} Base Drive Circuit, A500 - Schematic Drawing #D8625317

a. Insert the plug-in subassembly, h_{fe} Base Drive Circuit (A500), into the test circuit of Appendix IV, Figure d and connect the power supplies and other items of test equipment as indicated (or test while installed in the Transistor Test Set AN/USM-136). Turn ON the power and allow a 2 minute warm-up period.

b. Place the test switch SW-1 in the 2.0 microampere peak-to-peak position (or energize K502 by applying 28 volts to pin P of J503). Use the 3500 ohm plus or minus 1 percent 1/2 watt test resistor across pins F and H of J503. Observe on an oscilloscope placed across the test resistor the presence of a 1 Kc plus or minus 20 cycles per second sine wave signal. Adjust R523 for an amplitude of 20 millivolts.

Note: Consideration should be given to the loading effect of the oscilloscope input impedance on the equivalent value of the test resistor. A 1 percent accurate RMS voltmeter such as the John Fluke Model 910A can be used and a reading of 2.45 millivolts RMS should be obtained by the adjustment of R523.

c. Change the test switch, SW-1, to the 20 microampere peak-to-peak position (de-energize both relays). Replace the 3500 ohm test resistor with a 35K ohm plus or minus 1 percent 1/2 watt test resistor across the same pin location as in b. Observe on the RMS voltmeter that the amplitude of the 1 Kc signal is now 2.45 millivolts RMS plus or minus 3 percent. Do not readjust R523.

d. Change the test switch, SW-1, to the 0.2 microampere peak-to-peak position (energize only K501). Replace the 35K ohm test resistor with a 350 ohm plus or minus 1 percent 1/2 watt test resistor across the same pin position as in b. Observe on the RMS voltmeter that the amplitude of the 1 Kc signal is still 2.45 millivolts RMS plus or minus 3 percent. Do not readjust R523.

65. h_{FE} (Pulse) Base Drive Circuit, A600 - Schematic Drawing #D8625318

a. Insert the plug-in subassembly h_{FE} (pulse) Base Drive Circuit (A600) into the test circuit of Appendix IV, Figure e and connect the power supplies and other items of test equipment as indicated (or test while installed in the Transistor Test Set AN/USM-136). Turn ON the power and allow a 2 minute warm-up period.

b. Place a 1 ohm plus or minus 1 percent 1/2 watt test resistor as shown in Appendix IV, Figure e and move the test switch SW-1 to the position marked 1 and the test switch SW-2 to the 1 amp position (or when calibration is being made in the test set, program 1 amp of pulse h_{FE} base drive). Observe that the pulse as seen on an oscilloscope whose input probe is placed across the 1 ohm test resistor is 350 plus or minus 75 microseconds wide

at a frequency of 35 plus or minus 10 cycles per second. Adjust R613 (1 amp ADJ.) for an amplitude 1.0 volt.

c. Change the test switch SW-1 to the position marked .5 (or program 0.5 amp) and adjust R615, (.5 amp ADJ.) for a pulse amplitude of 0.5 volts as observed on the oscilloscope.

d. Change the test switch SW-1 to the position marked 0.25 (or program 0.25 amp) and adjust R616, (0.25 amp ADJ.) for a pulse amplitude of 0.25 volts as observed on the oscilloscope.

e. Change the test switch SW-1 to the position marked .125 (or program 0.125 amp) and adjust R617, (0.125 amp ADJ.) for a pulse amplitude of 0.125 volts as observed on the oscilloscope.

f. Replace the test resistor with one of 10 ohms plus or minus 1 percent 1/2 watt in the same location. Change the test switch SW-2 to the 100 ma position, and the test switch SW-1 to the position marked 1 (or program 100 milliamperes). Adjust R622 (100 ma ADJ.) for a pulse amplitude of 1.0 volt as observed on the oscilloscope.

g. Replace the test resistor with one of 100 ohms plus or minus 1 percent 1/2 watt in the same location. Change the test switch SW-2 to the 10 ma position (or program 10 milliamperes). Adjust R624 (10 ma ADJ.) for a pulse amplitude of 1.0 volt as observed on the oscilloscope.

66. Readout Counter, A1100 - Schematic Drawing #D8625321

No calibration or adjustment is required of the Readout Counter A1100, however, the following measurements can be used to determine if the circuits are operating properly.

a. Insert the plug-in subassembly. Readout Counter (A1100), into the test circuit of Appendix IV, Figure f and connect the power supplies and other items of test equipment as indicated (or test while installed in the Transistor Test Set AN/USM-136). Turn ON the power and allow a 2 minute warm-up period. This test is done in conjunction with the Light Driver (A1200).

b. Apply a continuous train of 50 Kc square wave pulses of a 7 volt amplitude to the input pin 1 of J1101. Observe on an oscilloscope connected to pin 20 of J1101 that the output consists of a train of 5 Kc pulses having an amplitude in excess of 7 volts.

c. Change the input pulse frequency to 5 Kc at the same voltage and observe that the output shall consist of a train of 500 cycles per second pulses having an amplitude in excess of 7 volts.

d. Stop the input signal so that the count as read on the light bulbs is at any number except "ZERO".

e. Apply a reset pulse of negative 3 volts having a pulse width at least 25 microseconds wide at the half voltage point to pin 24 and observe that the count as read on the light bulbs returns to "ZERO".

67. Light Driver, A1200 - Schematic Drawing #D8625322

The Light Driver A1200 requires no calibration, however, the following procedure can be used to test the boards.

a. Insert the plug-in subassembly, Light Driver (A1200) into the test circuit of Appendix IV, Figure f and connect the power supplies and other items of test equipment as indicated (or test while installed in the Transistor Test Set AN/USM-136). Turn ON the power and allow a 2 minute warm-up

period. This test is done in conjunction with the Readout Counter (A1100).

b. Reset the Readout Counter, observe the "ZERO" light indication.

c. Apply one positive going pulse of 7 volts amplitude to the input of the Readout Counter (pin 1 of J1001) and observe that the "ZERO" light will go out and the "ONE" light will come ON.

d. Apply one more positive going pulse of 7 volts amplitude and note the change from the "ONE" to the "TWO" light.

e. Repeat step d. eight more times and observe the change from TWO to THREE, etc. on through "NINE" and then back to "ZERO".

68. Final Checking

After replacement and recalibration of any parts, the test set must be given a final operational check (paragraph 48) before returning the unit to service.

Section V REPAIRS

69. General

Most of the electrical components of the test set are readily accessible and are easily replaced, if found to be faulty. Take care to tag each wire when removing a part to avoid errors where replacements are made.

70. Indicator Lamp Replacement

a. Front Panel Indicator Lamp replacement. Follow the removal and refitting procedures outlined in paragraph 31.a.(2), 31.a.(3), or 31.a.(4) as required.

b. TEST NUMBER projector and left and right decade projector lamp replacement is accomplished by performing the following procedure:

(1) Identify which lamp is burned out by consulting Table XIII below.

TABLE XIII

Projection LAMP LOCATION at Pin Number	XDS1309, TEST NUMBER projects a	XDS1306, Left Decade projects a	XDS1307, Right Decade projects a
1	1	1	1
2	2	2	2
3	3	3	3
4	4	4	4
5	5	5	5
6	6	6	6
7	7	7	7
8	8	8	8
9	9	9	9
10	10	0	0
11	11	left decimal.	
12	12	center decimal.	

(2) Unlatch the two (2) retainers on the right hand side just behind the front panel and swing open the front panel on its hinge, as opening a book.

(3) Remove the lamp retainer cap (blue) at the rear of the projector having the burned out lamp by using a slight lifting action with the fingernail or a small screwdriver under the metal clasp at either the top or bottom of the retainer cap at the end nearest the front panel to release it and withdraw it away from the rear of the projector.

CAUTION

Do not twist the wire cable. Be sure to note the relative position of the retainer cap for correct replacement.

(4) Withdraw the burned out lamp and replace with a type 327 lamp from the running spares.

(5) Refitting is the reverse of the above procedure.

c. OFF SCALE, far left ZERO, or far right ZERO indicator lamp replacement is accomplished by the following procedure:

(1) Unlatch the two (2) retainers on the right hand side just behind the front panel and swing open the front panel on its hinge, as opening a book.

(2) Unscrew the two (2) screws holding the plate containing lamp socket(s) and withdraw the plate. The shadow light lamps for OFF SCALE (DS1305) and far left ZERO (DS1304) are located together on the plate to the right of the pair of decade projectors as seen from the rear of the front panel. The far right ZERO (DS1308) is located above on the plate to the left (in the corner) of the pair of decade projectors as seen from the rear of the front panel.

(3) Turn the plate to expose the lamp(s) and unscrew the lamp retainer ring and note that the lamp comes out with, and is still inside the lamp retainer ring. Remove the lamp from the lamp retainer ring by pulling it straight out the rear. Replace with a type 327 from the running spares.

(4) Refitting is the reverse of the above procedure.

71. Removal and Replacement of the Automatic Lead Selector - In-Circuit Checker Module, A100

a. Unlatch the two (2) retainers on the right hand side just behind the front panel and swing open the front panel on its hinge, as opening a book.

b. Unplug connector P105.

c. Unscrew the six (6) mounting screws from the front panel.

d. Carefully remove the module from the rear of the front panel.

e. Refitting is the reverse of the above procedure.

72. Removal and Replacement of the h_{fe} Base Drive Module, A500

a. Rest the Test Set on its right side and unlatch the four (4) retainers on the rear cover and remove the cover.

CAUTION

Do not adjust any of the rear controls without consulting the section in this chapter dealing with calibration.

b. Unplug connector P501.

c. Unscrew the four (4) mounting screws holding the module in the shield can.

d. Carefully remove the module from its shield can observing the placement of the connector.

e. Refitting is the reverse of the above procedure.

Section VI THEORY OF TEST SET AN/USM-136

73. Block Diagram

The test set, transistor AN/USM-136 consists essentially of a series of programmable power supplies and test circuits controlled by front panel switches and a punched program card. See block diagram of Figure 7.

a. The panel controls (A) establish the mode of operation:

Automatic or Manual Stepping,

Leads Known or Unknown,

Data or Acceptance Limit Readout.

b. The card reader (B) establishes the test voltages, tests and test conditions, and acceptance limits.

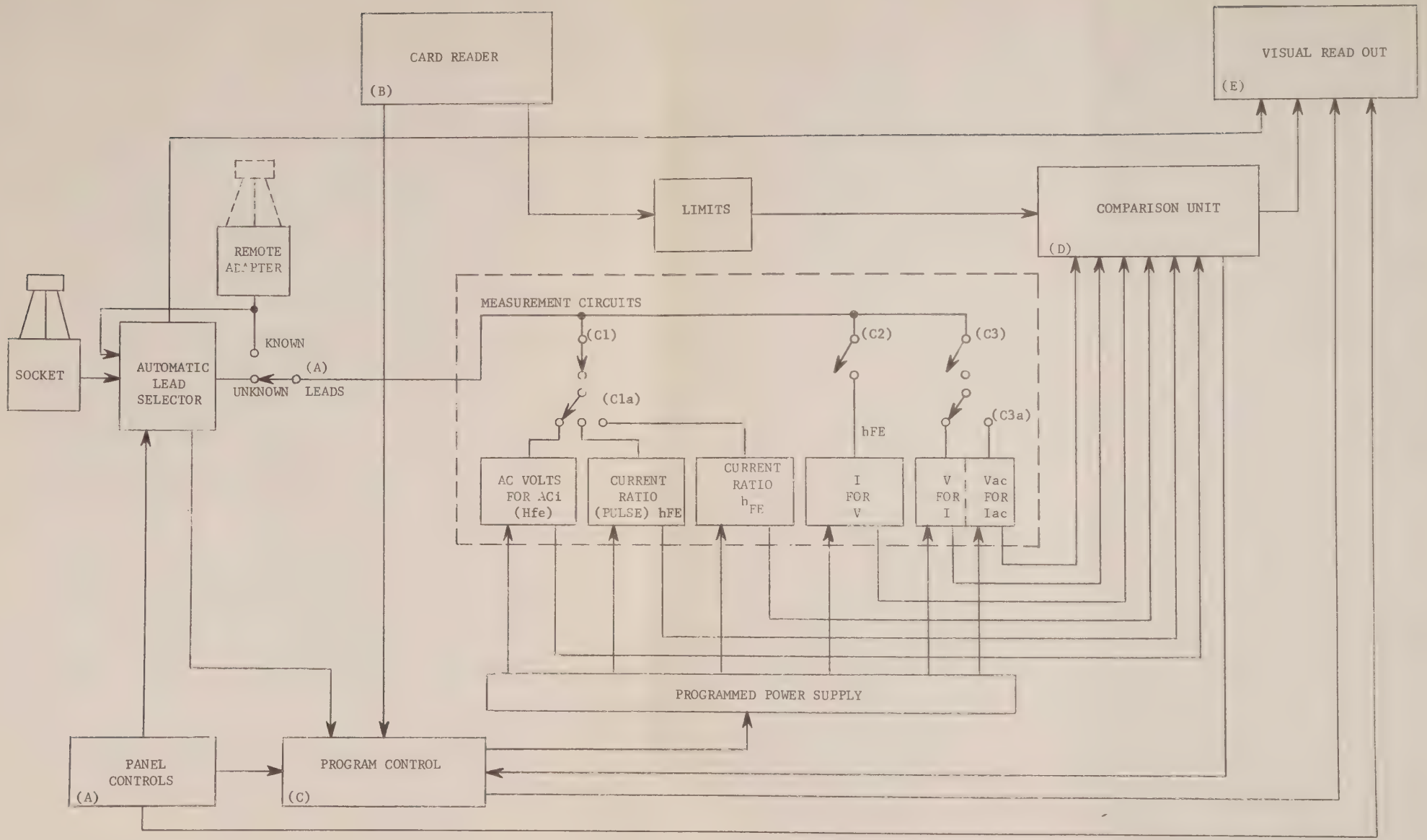

Figure 7. Block Diagram - Automatic Transistor Tester

M8625349

c. The program control (C) provides sequencing to the measurement circuits. Under command by the card reader (B) it allows gain tests (C1) of transistors for either h_{fe}, h_{FE} (pulse) or h_{FE} (C1a). It also allows a "current for an applied voltage" test (C2) or a "voltage for an applied current" test (C3) for either DC parameters (C3a) or AC parameters.

d. The comparison system (D) accepts all measurements and data and provides the GO, NO-GO decision.

e. The visual read-out (E) consists of the voltage-to-projection readout converters and all indicator lights.

f. Reference should be made to the information in paragraphs 15, 18, 19, 48, all of section III in this chapter, and Appendix VII.

74. Automatic Lead Selector - In-Circuit Checker Module, A100

The complete theory of operation of this module is contained in Appendix VII.

CHAPTER 5

SHIPMENT AND LIMITED STORAGE AND DEMOLITION TO PREVENT ENEMY USE

75. Repacking for Shipment or Storage

The exact procedure in repacking for shipment or limited storage depends on the material available and the conditions under which the equipment is to be shipped or stored. Refer to paragraph 12. and reverse the instructions given in that paragraph.

76. Demolition of Materiel to Prevent Enemy Use

The demolition procedures outlined below will be used to prevent the enemy from using or salvaging this equipment. Demolition of the equipment will be accomplished only upon order of the commander.

a. Smash. Smash the meters, controls, tubes, coils, switches, capacitors, and transformers, using sledges, axes, handaxes, hammers, crowbars, or heavy tools.

b. Burn. Burn cords, resistors, capacitors, coils, wiring, technical manuals, and circuit labels using gasoline, kerosene, oil, flame throwers, or incendiary grenades.

c. Bend. Bend panel case, shields, coaxial elements, and chassis.

d. Explosives. If explosives are necessary, use firearms, grenades, or TNT.

e. Disposal. Bury or scatter the destroyed parts in slit trenches, fox holes, or other holes, or throw them into streams.

f. DESTROY EVERYTHING.

APPENDIX I
REFERENCES

APPENDIX I

REFERENCES

I. Military Specifications

MIL-T-55202 (MU) ----------Test Set, Transistor: AN/USM-136.

MIL-S-55203 (MU) ----------Subassemblies, Plug-in, for Test Set, Transistor; AN/USM-136.

MIL-M-55204 (MU) ----------Module, Plug-in, Automatic Lead Selector - In-Circuit Checker, for Test Set, Transistor: AN/USM-136.

31 January 1963

APPENDIX II

LUBRICATION INSTRUCTIONS

FOR STEPPING SWITCHES

M8625349

31 January 1963

MAINTENANCE SPECIFICATIONS M-1005

FOR TYPE 20 AND 26 SPRINGDRIVEN STEPPING SWITCHES

K1313

OF

AN/USM-136

M8625349

INSPECTION AND READJUSTMENT

The Type 20 and 26 switches will retain their initial adjustments for a considerable time with no attention aside from periodic lubrication. After each 500,000 wiper assembly revolutions, inspect the switches, and perform any needed readjustments in accordance with the procedure and sequence given below. It is not unusual for these switches to meet all requirements during one or more inspections.

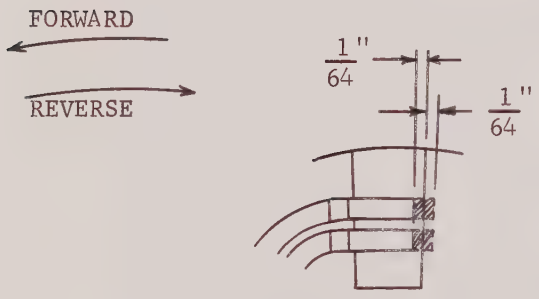

BRIDGING WIPERS

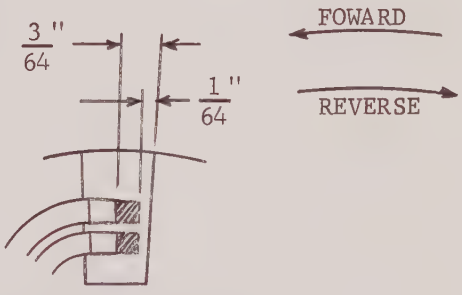

NON-BRIDGING WIPERS

Eliminate excessive forward play of the wiper tips by advancing the pawl stop toward the pawl until they touch. Tighten the screw carefully to avoid a change of setting.

Eliminate excessive reverse play of the wiper tips by moving the detent spring toward the ratchet, but not so far as to prevent its dropping freely into each ratchet tooth during manual stepping. Center the detent spring on the ratchet.

Armature Stop

The armature arm shall rest against the armature backstop. Inspect by

inserting a 0.0015-inch thickness gauge between the armature arm and the backstop. The gauge shall drag during withdrawal.

If the gauge does not drag, loosen the backstop screw and the nearest coil frame adjusting screw. Lift the backstop and backstop support against the armature, but not to the extent of lifting the pawl from its stop. After tightening the two screws, recheck for gauge drag and for positive action of the detent spring during manual stepping of the switch. An ideal adjustment is to have the armature arm and pawl strike their stops simultaneously.

Off-normal Contacts

Step the switch manually through "home" position, and observe compliance with the following requirements:

On either side of "home" position, there shall be clearance between the cam spring and the cam.

Manually step the wipers slowly to "home" position. Note that the moving contact leaves the lower fixed contact first and then touches the upper fixed contact, causing it to be visibly deflected. On switches with more than a simple break-make contact arrangement, all break contacts should open simultaneously, and all make contacts should close simultaneously.

Contact separation in either the "home" or "off-home" positions shall be 0.008 inch minimum.

Make necessary readjustments by bending the fixed springs at a point near the stack insulators.

Interrupter and Auxiliary Contacts

Close the armature manually against the heelpiece, and observe contact action. The armature spring shall make contact with and visibly deflect the normally open contact spring.

The normally closed contacts require no attention unless used for self-interruption. In that case, operate the switch, and check for smooth and positive self-interrupted operation.

Readjust by bending the stationary springs as follows:

Bend the normally open contact spring toward the armature spring to restore its deflection.

Bend the normally closed contact spring slightly up or down to restore smooth and positive self-interrupted operation.

When bending either contact spring, do not decrease the normally open contact gap below 0.008 inch, nor the normally closed gap below 0.006 inch.

LUBRICATION

Periodic lubrication of stepping switches is essential, and is suited to two operating temperature ranges, depending on the usage of the switch:

Standard Operation: These switches are rated for operation from 0°C to +85°C, and are identified by a red label. They require lubrication at 3-month intervals, or after completing 25,000; 75,000; 150,000; 250,000; and each succeeding 250,000 wiper revolutions, whichever occurs first. Use the Standard Lubrication Kit, Clare part number RP-9466, containing brushes, application papers, and three lubricants* designated "A", "B", and "C".

Low Temperature Operation: These switches are rated for operation from -55°C to +85°C, and are identified by a blue label. They require lubrication at 6-week intervals, or after completing 10,000; 30,000; 60,000; 125,000; and each succeeding 125,000 wiper revolutions, whichever occurs first. Use the Low Temperature Lubrication Kit, Clare part number RP-9467, containing brushes, application papers, and three lubricants* designated "D", "E", and "F".

Lubricate most points with the small artists' brushes. Use a separate brush for each lubricant, applied in the following amounts:

One dip is the amount retaining on the brush when it is immersed one half its bristle length in the lubricant, and then drawn across the edge of the container to remove the excess. In no case should a droplet form.

One light dip is the same as above, except that the brush is immersed one fourth its bristle length.

Apply lubricant "A" or "D" as follows:

Withdraw the wiper assembly bearing pin approximately 1/4 inch, apply one dip to each end, and replace the pin.

One dip to each side of a strip of bond paper. Pass the strip between each pair of wiper tips in four levels of the wiper assembly. Repeat for each additional four levels, then rotate the wiper assembly several times to lubricate the bank contacts.

Divide one dip among four levels of wipers at the inner surfaces where the brush springs ride. Repeat for each additional four levels, then rotate the wiper assembly several times to distribute the lubricant.

One dip to each side of a strip of bond paper. Pass the strip between each armature arm bushing and the spring it deflects.

Divide one light dip among the lobes of the off-normal cam, applying the lubricant to the lifting surfaces only.

Apply Lubricant "B" or "E" as follows:

Remove the armature bearing pin, work one dip well into each armature bearing, and replace the pin.

One dip to the pawl bearing, working the lubricant in between the bearing, armature arm, and pawl.

Apply the residue on the brush into each pawl spring hook at the eyelets.

Apply Lubricant "C" or "F" as follows:

Stir the lubricant to the consistency of a smooth paste, and distribute two dips evenly over the ratchet teeth while rotating the wiper assembly.

*These lubricants are identified as follows:

"A" - clock oil, or the equivalent.

"B" - Light, colorless, mineral oil.

"C" - A 1:1 mixture (by volume) of clock oil and fine powdered mica.

"D" - Dow Corning #DC-200 Fluid, viscosity 20, or the equivalent.

"E" - Dow Corning #DC-33 Grease, medium consistency, thinned slightly with Dow Corning #DC-200.

"F" - A 2:1 mixture (by volume) of fine powdered mica and Dow Corning #DC-33 Grease, medium consistency, thinned slightly with Dow Corning #DC-200 Fluid, viscosity 20, or the equivalent.

M8625349

TYPE 20 SWITCH
IDENTIFICATION OF PRINCIPAL PARTS

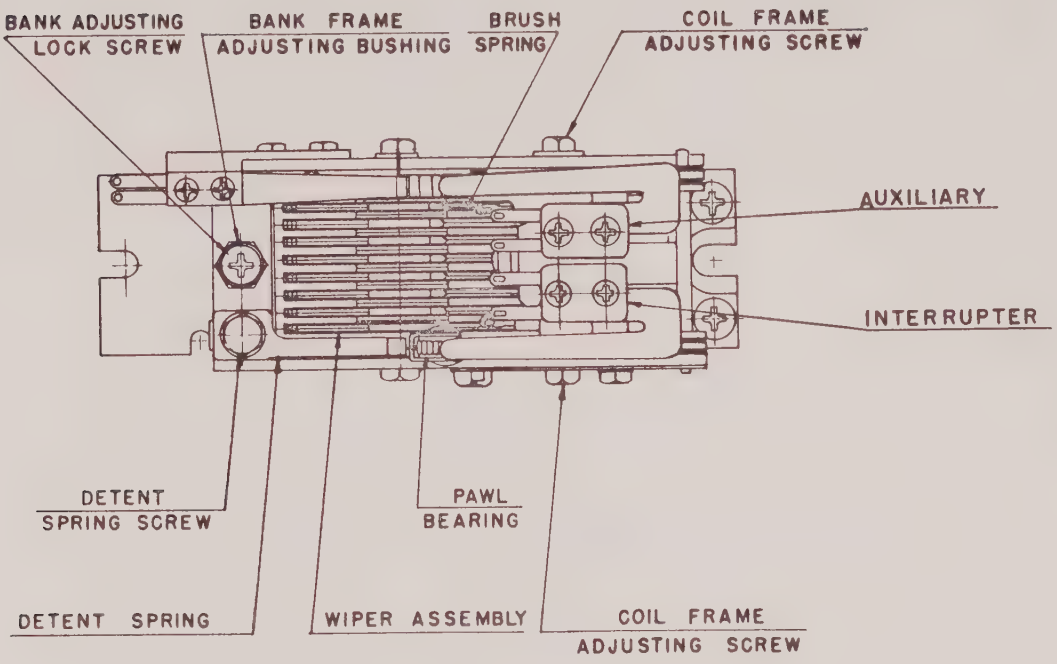

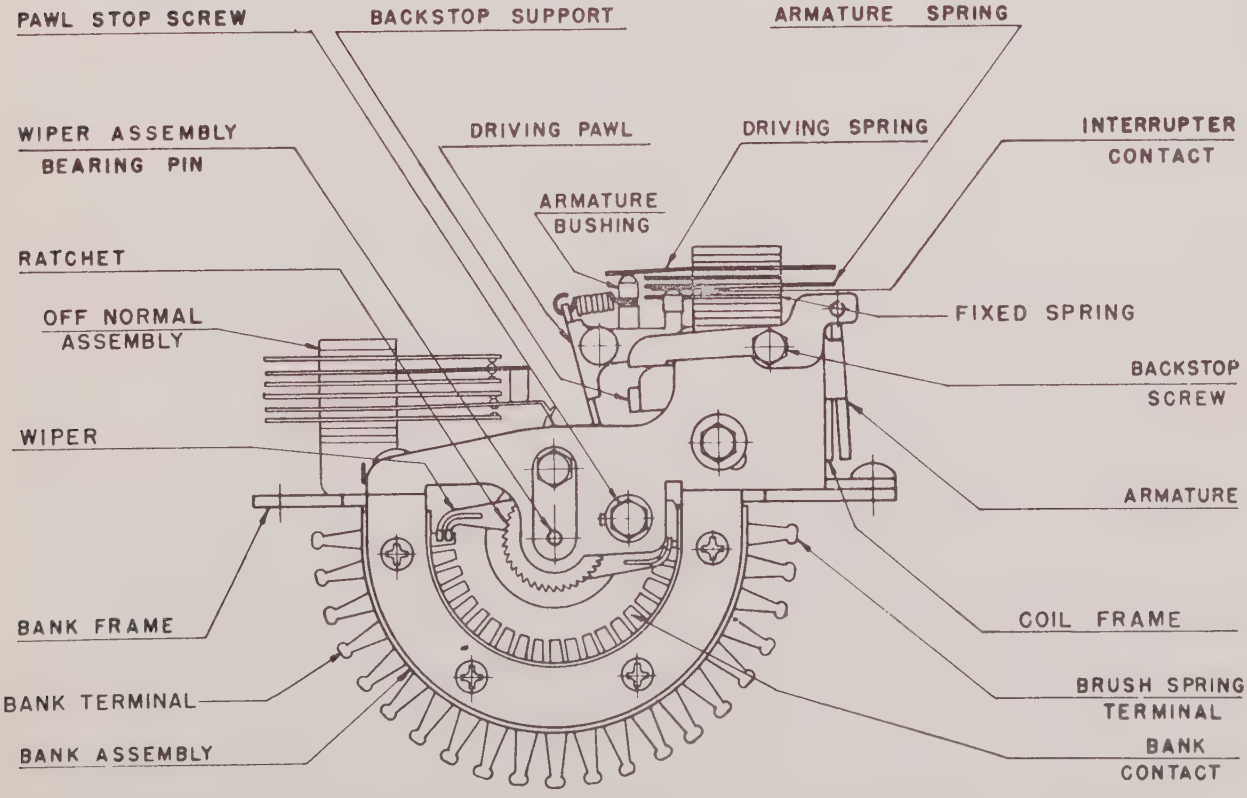

31 January 1963

MAINTENANCE SPECIFICATION M-1008

ADJUSTMENT & LUBRICATION

OF

TYPE 210 & TYPE 211 SPRINGDRIVEN STEPPING SWITCHES

K102

OF AN/USM-136

C. P. CLARE & CO.

3101 Pratt Blvd.

Chicago 45, Illinois

M8625349

II-7

ADJUSTMENT & LUBRICATION

Type 210 and Type 211 Springdriven Stepping Switches are designed to provide a long, maintenance-free life. However, the full capabilities of the switches can be realized only if they are periodically lubricated and adjustments are checked and corrected.

ADJUSTMENT

Switch adjustments should be checked each 500,000 revolutions of the wiper assembly. To facilitate inspection, accumulated lubricants and dirt should be removed. A lintless cloth and a brush usually are adequate, but solvents such as trichlorethylene or carbon tetrachloride may be sparingly used if warranted by the condition of the switch. Normal precautions to minimize inhalation of toxic fumes should be observed.

ARMATURE ASSEMBLY

Inspection

1. Energize the switch with rated voltage. A gap should exist between the armature and coil frame adjacent to the bearing pin, but should not exceed 0.006 in.
2. The armature, armature arm, and pawl bracket should clear the main frame and coil frame when moved to the limits permitted by bearing play.
3. The armature arm bushings should be in alignment with the center lines of the interrupter springs and the drive springs. The two pawl springs should be centered in a plane perpendicular to the wiper assembly shaft and passing through the center of the ratchet.

M8625349

Readjustment

1A. Loosen the three Allen head screws which secure the yoke to the coil frame. Insert a 0.003 in. gauge in the gap between the armature and coil frame. Energize the coil with rated voltage and tighten the screws.

2A. Align the armature arm as necessary by bending.

3A. Align the armature bushings by bending the armature arm. Recheck the requirements of Paragraph 2.

DETENT SPRING

Inspection

4. The tip of the detent should be parallel to the edge of the ratchet teeth.

Clearance between the detent and wipers should be 0.025 in. minimum. Clearance should exist between the detent and the pawl stop or backstop.

The detent should drop freely into each succeeding ratchet tooth as the switch is stepped by pressing the armature opposite the coil core, but clearance between the tip and the teeth should be the minimum necessary to obtain consistent operation. Excessive clearance permits undue wiper play - see Figure 1.

5. Tension between the detent and the ratchet, with the mechanism partially stepped to position the detent near the peak of a ratchet tooth, should be 140 ± 30 grams. Tension is measured at the form near the tip of the spring.

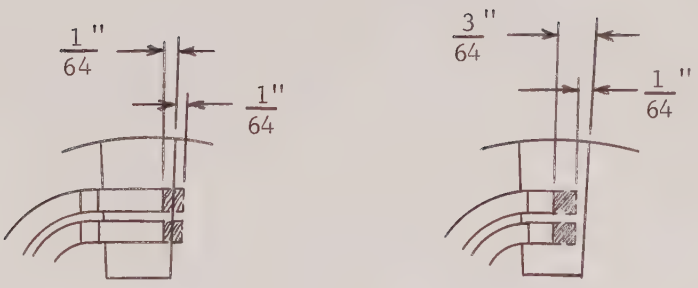

BRIDGING WIPERS NON-BRIDGING WIPERS

Figure 1

Readjustment

4A. Loosen the two detent screws. Then, with the pawl bracket resting firmly on the backstop, rotate the wiper assembly in the reverse direction to position the pawl in the root of the ratchet tooth. While maintaining this condition, move the detent against the root of the mating ratchet tooth, taking care to obtain proper clearances, and tighten in position. Excessive play resulting from improper adjustment of the pawl stop (Paragraph 8) may still be apparent.

5A. Grasp the detent and the overhanging end of the clamping plate with a duckbill pliers and bend the clamping plate in the direction required to attain the proper tension. The end of the clamping plate must be in contact with the detent.

PAWL, BACKSTOP, AND PAWL STOP

Inspection

6. The side of the pawl adjacent to the wipers should be flush with the corresponding surface of the ratchet.

7. The pawl should exert a pressure of 35 ± 10 grams against the ratchet with the coil energized.

M8625349

8. When the armature is manually actuated by application of pressure opposite the coil core, the pawl should drop into the next ratchet tooth without binding. It should not drop into the next tooth when the armature is actuated with a 0.003 in. gauge inserted between the armature and core.

The pawl, ratchet, and pawl stop should mate as shown in Figure 2. The pawl stop should hold the pawl close enough to the ratchet to limit wiper play to that shown in Figure 1, but should not cause noticeable drag when the armature is manually actuated. Perceptible clearance should exist between the pawl stop and the adjacent ratchet tooth.

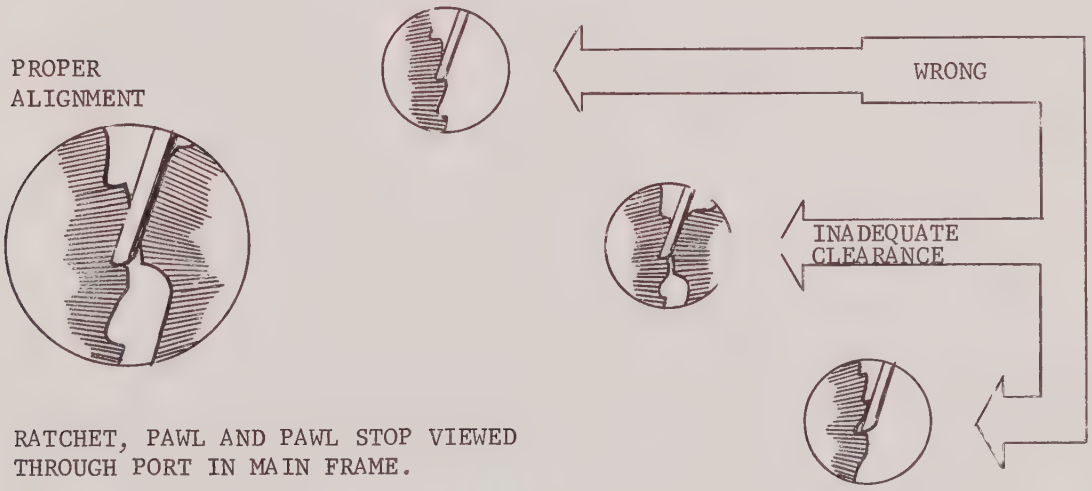

Figure 2

Readjustment

6A. Loosen the two pawl screws and retighten with the pawl properly positioned.

M8625349

7A. Using a duckbill pliers, grasp the pawl and the overhanging end of the pawl clamping plate. Bend the clamping plate in the proper direction to achieve the desired pawl tension. The end of the clamping plate must be in contact with the pawl.

8A. Procedure:

a. Loosen the two detent screws and the pawl stop screw.

b. Manually actuate the armature. Loosen the backstop screw and retighten after moving the backstop in the appropriate direction (away from the armature arm if the switch did not step - toward it if the switch stepped with the 0.003 in. gauge between armature and core). In repositioning the backstop, align it to mate squarely with the pawl bracket.

c. Set the detent as described in step 4A.

d. Check operation as described in paragraph 8, manually rotating the wiper assembly in the reverse direction following each step to position the detent in the root of the mating ratchet tooth. If proper operation has not been achieved, repeat steps a-d.

e. Check the manner in which the pawl and ratchet mate - Figure 2. If improper, repeat step a, loosen the pawl bracket screw, and move the pawl bracket in the required direction. Retighten the pawl bracket screw, making sure the serrations in the pawl bracket and the armature arm are properly aligned. Repeat steps a-e.

f. Move the pawl stop to the position shown in Figure 2, holding it against the pawl while tightening the pawl stop screw. If

clearance between the pawl stop and the adjacent ratchet tooth cannot be achieved, the pawl and ratchet will also mate improperly. Follow the procedure of sub-paragraph e to attain the proper adjustment.

WIPER ASSEMBLY

Inspection

9. Wiper assembly side play should be perceptible when the assembly is moved by hand.
10. With the wiper assembly pressed firmly against the support bracket, perceptible clearance should exist between the number wheel and the pointer or support bracket.
11. Wipers should be straight and have no sharp kinks or bends other than die formed.
12. Wiper tips should rest flat against the bank contacts.
13. Tension between the wipers and bank contacts, measured at the form near the tip, should be 25 ± 15 grams. Tension should be about evenly divided between tips of bifurcated wipers.
14. Wipers of adjacent levels should be separated by a minimum of 0.025 in. when on the bank contacts.
15. Side movement of the wipers as they contact or leave the bank contacts should not exceed 0.020 in.

Readjustment

9A. Adjustment should not be required. If it is, it can be accomplished by filing the end of the ratchet shaft or the wiper assembly shaft.

10A. Reform the pointer, number wheel, or support bracket as necessary.

11A. Straighten wipers as required with a duckbill pliers. Wipers having sharp kinks cannot be successfully straightened and should be replaced.

12A. Align wiper tips by bending with a duckbill pliers.

13A. Bend the wiper slightly in the required direction at a point near its root using a duckbill pliers. Recheck the requirements of paragraph 12.

14A. See 11A. Recheck the requirements of paragraphs 12 and 13.

15A. See 11A and 13A. Recheck the requirements of paragraphs 12, 13, and 14.

BANK ASSEMBLY

Inspection

16. Wiper position on the bank contacts should conform with Figure 1.

17. Clearance between wiper tips and bank level insulation should remain approximately the same as the wiper assembly is rotated. Clearance on all levels should be approximately equal.

18. As the wipers enter the bank, perceptible clearance should exist between the wipers and brush springs.

19. Brush springs should have no sharp bends other than die formed.

20. With the bank assembly removed from the switch, the two tips of each brush spring should be separated from each other by about 3/16 in. This spacing will provide proper brush spring tension when the bank assembly is on the switch.

(The bank assembly is removed by removing the two bank assembly screws and the pointer screw.)

Readjustment

16A. Loosen the two bank assembly screws and retighten with the bank assembly positioned for proper alignment.

17A. Loosen the four bank screws and retighten with the bank levels aligned. Recheck the requirements of paragraph 16.

18A. Form the brush springs or wipers as necessary using a duckbill pliers. If the wipers are reformed, recheck the requirements of paragraphs 11-15.

19A. Form the brush springs as necessary using a duckbill pliers. Recheck the requirements of paragraph 18.

20A. Spread the brush tips to obtain the desired spacing. With the switch reassembled, check the requirements of paragraphs 16-19.

DRIVE SPRINGS

Inspection

21. All switches with standard adjustments should meet the requirements listed below. The armature should seat against the coil core when coil current is equal to the value in the Operate column. The armature should remain in its de-energized position when coil current is equal to the value in the Non-Op column.

Readjustment

21A. Increase or decrease drive spring tension as necessary to meet the operate, non-operate requirements by bending the drive spring adjacent to the pileup using an RP-9352 Spring Bender.

Nominal Voltage	Coil Resistance	Number of Levels	Operate Current	Non-Op Current
6	1.5	1-4	1.9	1.2
		5-8	2.4	1.6
		9-12	2.9	1.8
12	6	1-4	1.0	0.6
		5-8	1.2	0.75
		9-12	1.5	0.9
24	24	1-4	0.5	0.3
		5-8	0.6	0.4
	20	9-12	0.75	0.45
48	100	1-4	0.25	0.15
		5-8	0.3	0.2
	70	9-12	0.4	0.25
60	150	1-4	0.2	0.12
		5-8	0.25	0.16
	100	9-12	0.36	0.20
110	600	1-4	0.1	0.06
		5-8	0.13	0.08
	400	9-12	0.19	0.11

INTERRUPTER CONTACTS

Inspection

Normally closed contacts actuated by the switch armature and used to open the switch coil circuit are designated "Interrupter Contacts." Normally open contacts associated with the movable interrupter contact spring are included in this definition. These contacts are usually cylindrical in form.

22. Pressure between the normally closed interrupter contacts should be 300 ± 100 grams. The pressure is measured by deflecting the movable contact spring with a gram gauge placed adjacent to the contacts. If two or more movable springs contribute to the contact pressure, tension should be divided equally among them. M8625349

23. The normally closed interrupter contacts should open just before the pawl drops into the next ratchet tooth.

The switch should operate smoothly and at a rate in excess of 35 steps per second when running self-interrupted on nominal voltage with recommended capacitor-resistor contact protection.

24. With the coil energized, pressure between normally open interrupter contacts should be 150 ± 100 grams. Pressure is measured by deflecting the normally open contact spring with a gram gauge placed adjacent to the contact.

25. Contact gaps with coil energized should be 0.006 in. minimum. Gaps with the coil de-energized should be 0.008 in. minimum.

Readjustment

22A. Bend the movable interrupter spring at a point adjacent to the pileup using a duckbill pliers or the RP-1068 Spring Bender.

23A. Bend the normally closed contact spring at a point adjacent to the pileup using a duckbill pliers or the RP-2129 Spring Bender. Recheck the requirement of paragraph 22.

24A. Bend the normally open contact spring at a point adjacent to the pileup using a duckbill pliers or the RP-1068 Spring Bender.

25A. See 23A and 24A.

AUXILIARY INTERRUPTER CONTACTS

Inspection

Contacts actuated by the switch armature, but not included in the definition of "Interrupter Contacts", are designated "Auxiliary Interrupter Contacts." Contacts provided are usually dome shaped.

26. Pressure between normally closed auxiliary interrupter contacts should be 75 ± 25 grams. Pressure is measured by deflecting the movable spring with a gram gauge placed adjacent to the contact.

A perceptible gap should exist between the movable spring bushing and the surface which actuates it.

If there are no normally closed auxiliary interrupter contacts, the movable spring bushing should rest on the surface supporting it with a pressure of 75 ± 25 grams. Pressure is measured as described above.

27. With the coil energized, pressure between normally open contacts should be 150 ± 100 grams. Pressure is measured by deflecting the normally open contact spring with a gram gauge placed adjacent to the contact.

28. Contact gaps - coil energized or de-energized - should be 0.008 in. minimum.

Readjustment

26A. To alter contact pressure, bend the movable spring at a point adjacent to the pileup using duckbill pliers or the RP-1068 Spring Bender.

To adjust the gap between the spring bushing and the actuating surface, bend the normally closed contact spring at a point adjacent to the pileup using a duckbill pliers or the RP-2129 Spring Bender. Recheck pressure between normally closed contacts.

27A. Bend the normally open contact spring at a point adjacent to the pileup using a duckbill pliers or the RP-9068 Spring Bender.

28A. See 26A and 27A.

M8625349

Inspection

29. The off-normal cam rider should be positioned on a number wheel lobe in the "home" position and should clear the lobe by 0.008 in. minimum in all other positions.

The side of the cam rider adjacent to the wipers should be approximately flush with the corresponding side of the number wheel lobe.

Clearance between the off-normal springs and the wipers should be 0.025 in. minimum.

30. Contacts closed when the cam rider is positioned on a number wheel lobe should exert a pressure of 60 ± 30 grams against each other. Check on each lobe. Pressure is measured by deflecting the fixed spring, with the gauge placed adjacent to the contact.

31. Contact gaps with the cam rider off the lobes should be 0.008 in. minimum. Clearance between the cam rider and number wheel should be 0.008 in. minimum.

32. The movable spring equipped with the cam rider should exert a pressure of 50 ± 15 grams on the contact or spring supporting it when not in contact with one of the number wheel lobes. If two or more springs rest on this contact or spring, this pressure should be divided equally between them. Pressure is measured by deflecting the movable spring, with the gauge placed adjacent to the contact.

33. Other contacts closed with the cam rider off the number wheel lobes should exert a pressure of 40 ± 15 grams against each other. If two or more springs contribute to the contact pressure, tensions should be equally divided among them.

M8625349

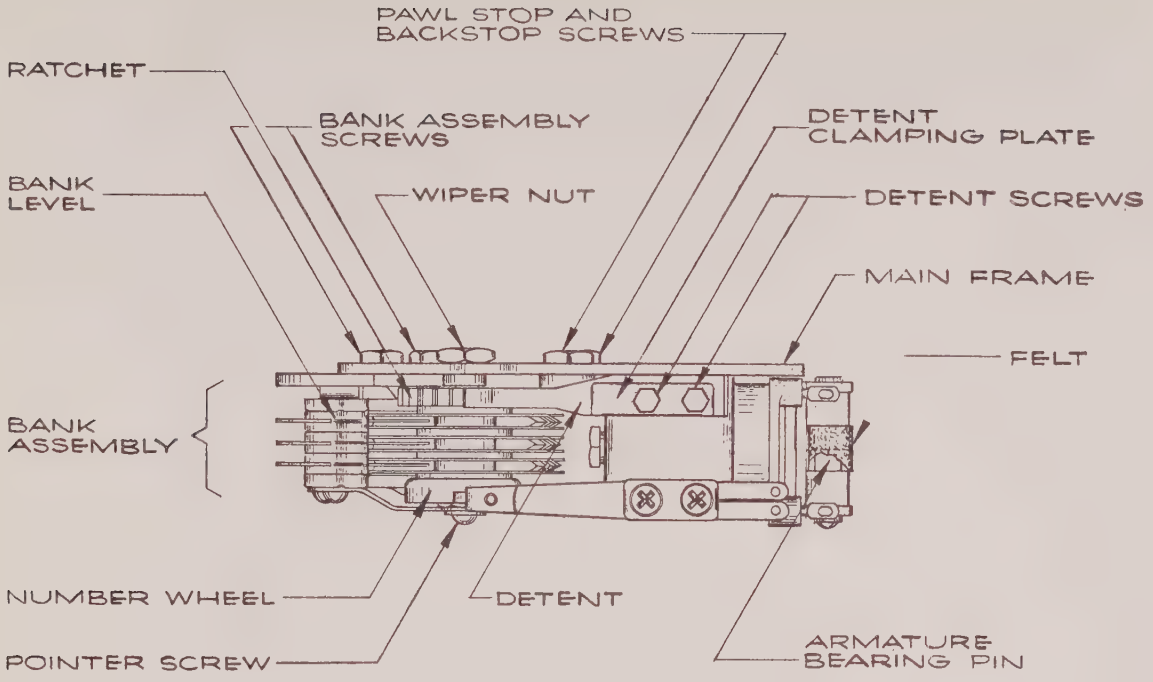
PAWL STOP AND BACKSTOP SCREWS
RATCHET
BANK ASSEMBLY SCREWS
DETENT CLAMPING PLATE
BANK LEVEL
WIPER NUT
DETENT SCREWS
MAIN FRAME
FELT
BANK ASSEMBLY
NUMBER WHEEL
DETENT
POINTER SCREW
ARMATURE BEARING PIN

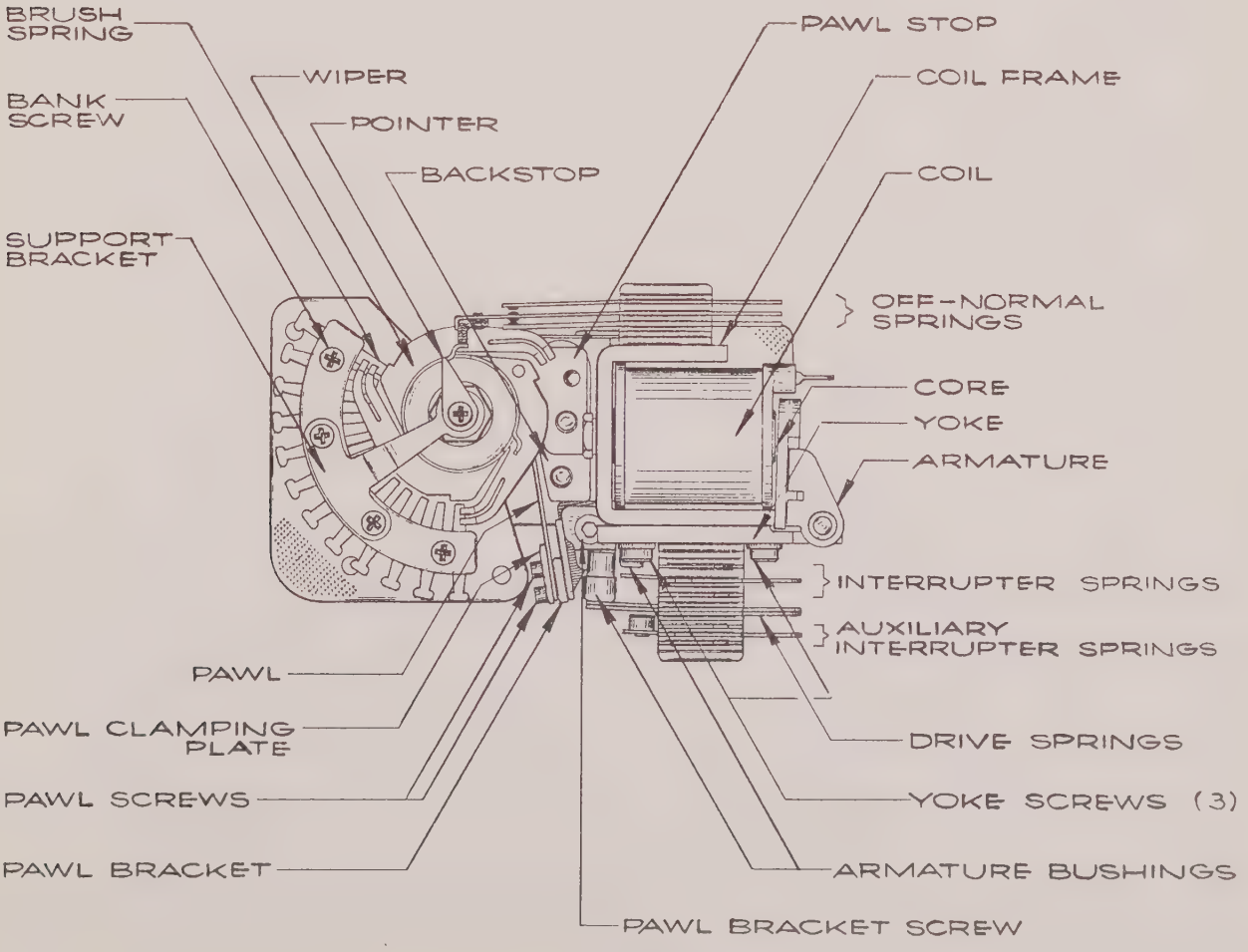
BRUSH SPRING
PAWL STOP
WIPER
COIL FRAME
BANK SCREW
POINTER
BACKSTOP
COIL
SUPPORT BRACKET
OFF-NORMAL SPRINGS
CORE
YOKE
ARMATURE
INTERRUPTER SPRINGS
AUXILIARY INTERRUPTER SPRINGS
PAWL
PAWL CLAMPING PLATE
DRIVE SPRINGS
PAWL SCREWS
YOKE SCREWS (3)
PAWL BRACKET
ARMATURE BUSHINGS
PAWL BRACKET SCREW

A perceptible gap should exist between the bushings attached to the movable springs associated with these closed contacts and the movable spring closer to the number wheel.

Readjustment

29A. On switches having more than three levels, the off-normal assembly is mounted on a bracket secured to the coil frame by two screws. To adjust off-normal position, loosen the two screws and retighten with the off-normal assembly properly positioned.

On switches having three or fewer levels, the springs are attached directly to the coil frame. Adjustment is limited to the clearances in the assembly.

30A. Bend the fixed contact spring adjacent to the pileup using a duckbill pliers or the RP-1068 Spring Bender. If pressures are radically different on different number wheel lobes, form the lobes as necessary.

31A. Bend the spring on which the movable spring rests. Use a duckbill pliers or the RP-2129 Spring Bender.

32A. Bend the movable spring adjacent to the pileup using a duckbill pliers. Recheck the requirements of paragraph 31.

33A. To adjust tension bend the movable spring adjacent to the pileup using a duckbill pliers.

To adjust bushing gap, bend the associated fixed contact spring at a point adjacent to the pileup using a duckbill pliers or the RP-2129 Spring Bender.

Type 210 and 211 Springdriven Stepping Switches are supplied with lubrication suitable for either of two temperature ranges— 0°C to 85°C or -55°C to 85°C:

Standard Operation (0°C to +85°C):

Switches lubricated for this temperature range at the factory are identified by a red label. They should be relubricated at 3-month intervals or after 50,000; 150,000; 300,000; 500,000; and each succeeding 500,000 wiper assembly revolutions (30 or 33 steps), whichever occurs first. Clare Lubrication Kit RP-9466 with lubricants designed "A", "B", and "C", brushes, and application papers is recommended.

Low Temperature Operation (-55°C to +85°C):

Switches lubricated for this temperature range at the factory are identified by a blue label. More frequent lubrication is required than with standard lubrication. Suggested intervals are each 6 weeks or after 25,000; 75,000; 150,000; 250,000 and each succeeding 250,000 wiper assembly revolutions (30 or 33 steps), whichever occurs first. Clare Lubrication Kit RP-9467 with lubricants designated "D", "E", and "F", brushes, and application papers is recommended.

General

Lubricants applied with a brush are measured in "dips." This is the amount retained on a #3 artist's brush immersed one-half its bristle length in the lubricant and drawn across the edge of the container to remove the excess. A "light dip" is similar, except the brush is immersed one-fourth its bristle length.

Lubricants used are:

"A" - Clock oil.

"B" - Light, colorless mineral oil.

"C" - A two-to-one mixture (by volume) of finely powdered mica and clock oil.

"D" - Dow Corning #DC-200 Fluid, viscosity 20.

"E" - Dow Corning #DC-33 Grease, medium consistency, thinned slightly with lubricant "D".

"F" - A one-to-one mixture (by volume) of finely powdered mica and lubricant "E".

Lubricant "A" or "D"

1. Apply one dip to the wiper assembly shaft at the inside of the support bracket. Apply one dip to the shaft at the outside of the ratchet.
2. Apply two dips to each side of a strip of bond paper. Lubricate each pair of wipers by passing the paper between them. Rotate the wiper assembly to transfer some of the lubricant to the bank contacts.
3. Treat another strip of bond paper as described above and pass it between the drive spring and the associated armature bushing. Do not lubricate the interrupter bushing.
4. Apply one light dip to each wiper pair at the points of contact between brush springs and wipers. Rotate the wiper assembly to distribute the lubricant.
5. Divide one light dip among the number wheel cam lobes.
6. Saturate the yoke bearing felt of low temperature switches having a felt with lubricant "D".

Lubricant "B"

1. Apply one dip to each yoke bearing. On switches with a yoke bearing felt, saturate the felt.

Lubricant "E"

1. On switches without a yoke bearing felt, use a flat toothpick or similar device to work a small quantity of lubricant into each yoke bearing.

Lubricant "C" or "F"

1. Apply two dips to the ratchet teeth while rotating the wiper assembly to distribute the lubricant.

31 January 1963

APPENDIX III

SCHEMATIC DIAGRAMS

M8625349

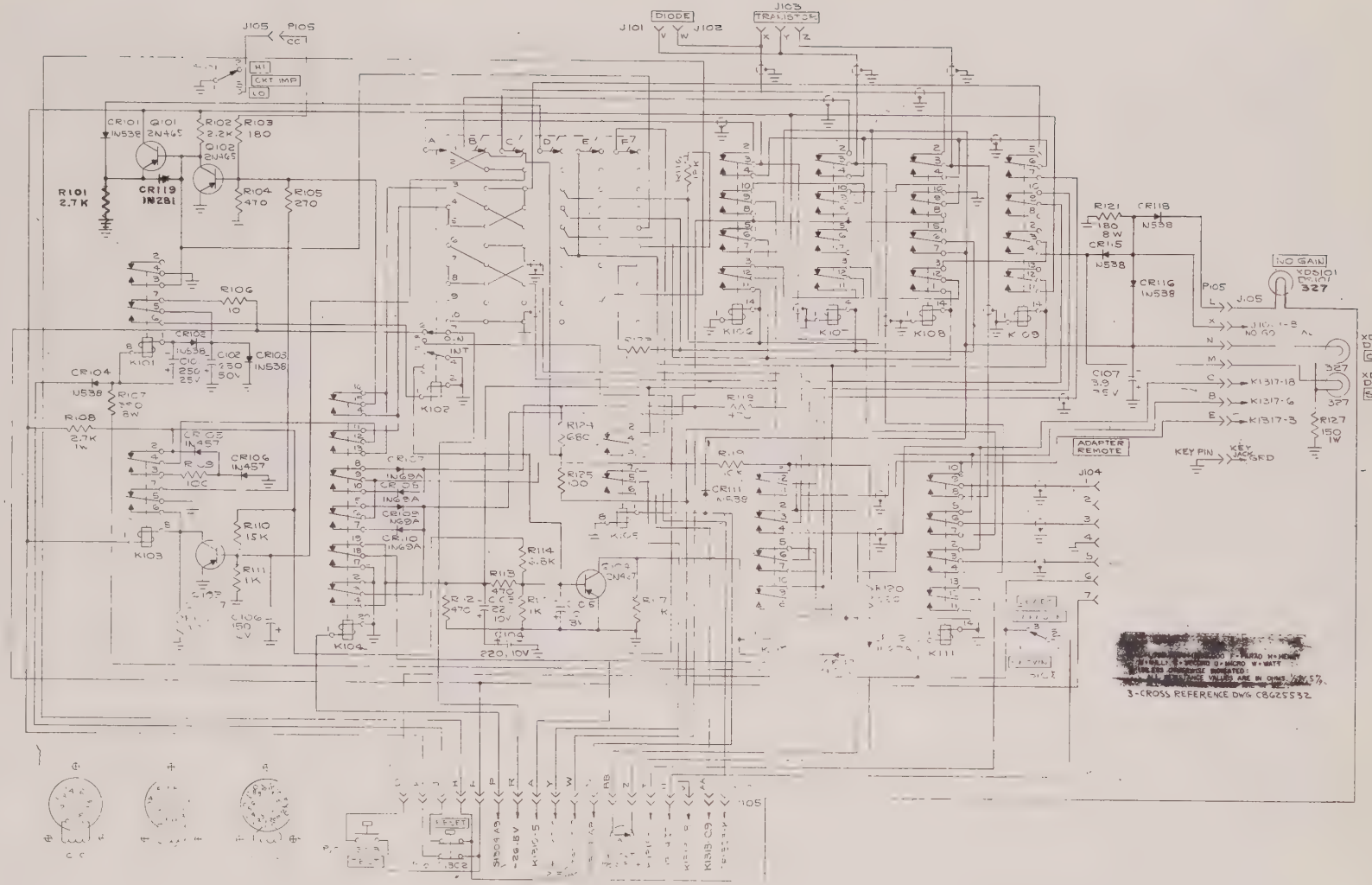

M8625349

31 January 1963

Electrical Schematic Automatic Lead Selector A100

Dwg. 8625378

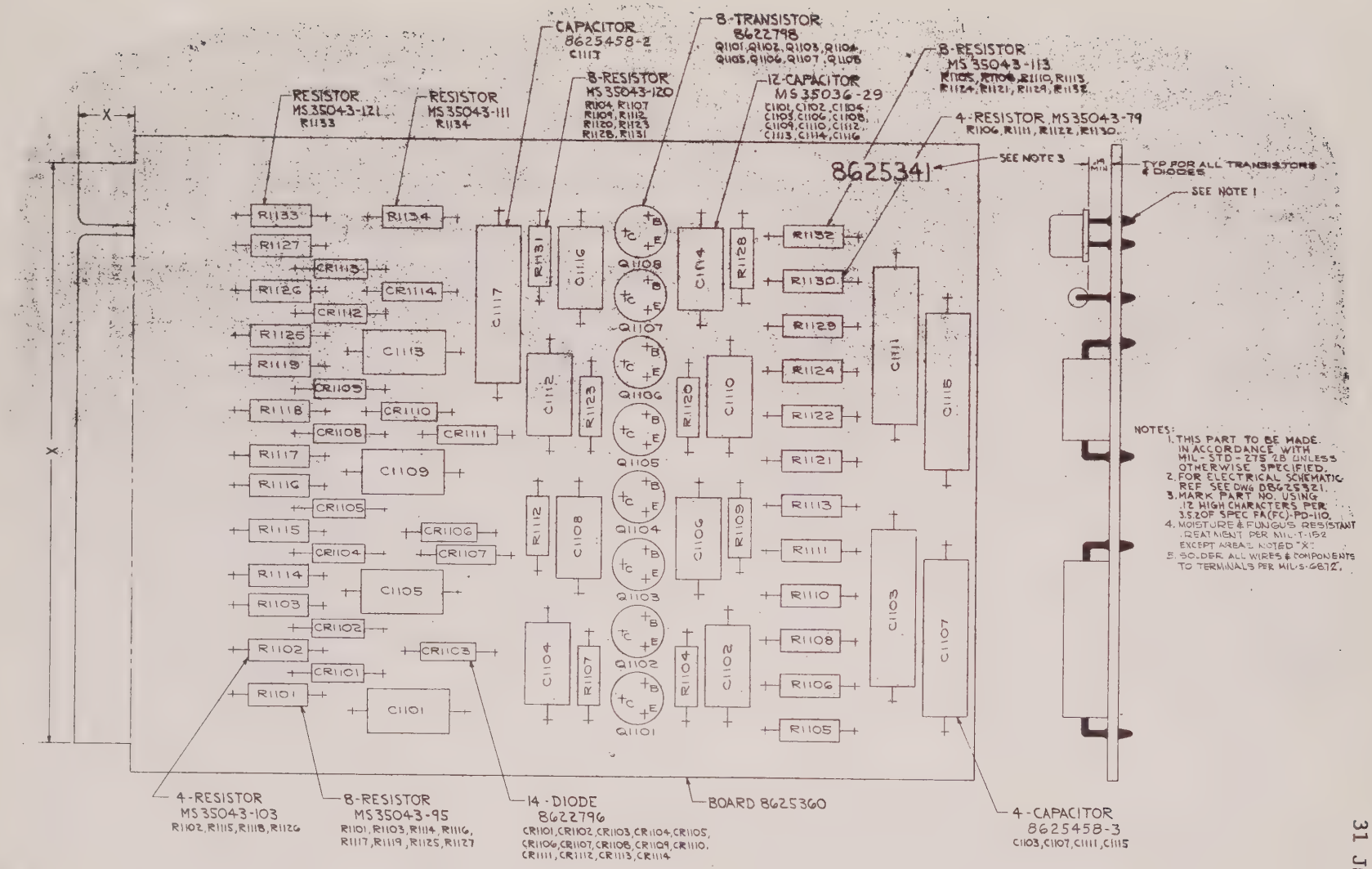

FOR LIST OF PARTS SEE ENGINEERING PARTS LIST 8625341

CODE IDENT NO. 00000
ORDNANCE PART NO. 8625341

Dwg. 8625341

Component Board Assembly A110

M8625349

31 January 1963

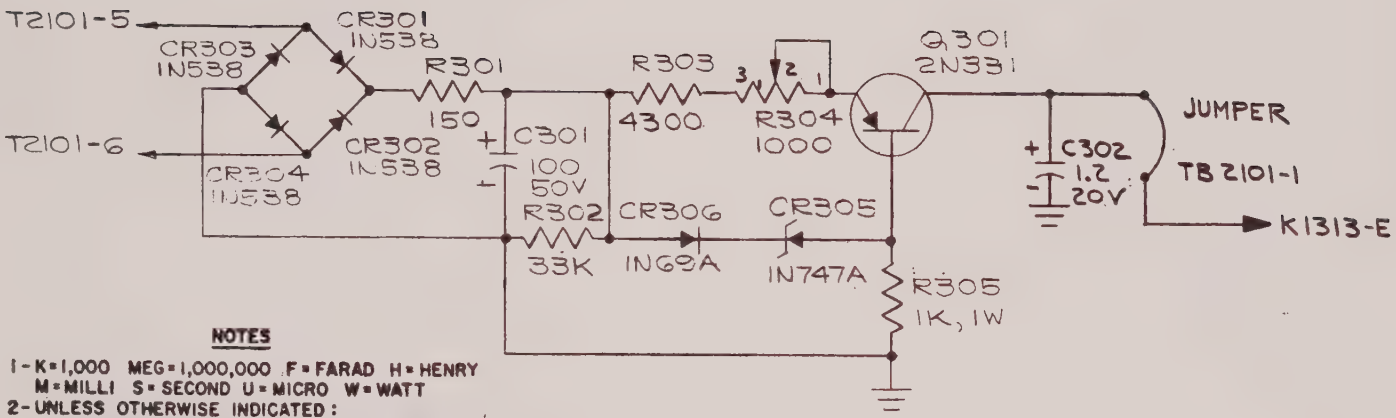

NOTES

1 - K = 1,000 MEG = 1,000,000 F = FARAD H = HENRY
M = MILLI S = SECOND U = MICRO W = WATT

2 - UNLESS OTHERWISE INDICATED:
ALL RESISTANCE VALUES ARE IN OHMS, 1/2W, 5%
ALL CAPACITANCE VALUES ARE IN UF

3 - CROSS REFERENCE DWG C8625532

CODE IDENT NO. 00000
ORDNANCE PART NO. 8625370

Dwg. 8625370

Electrical Schematic Regulated 1 MA Current Supply A300

MB625349

31 January 1963

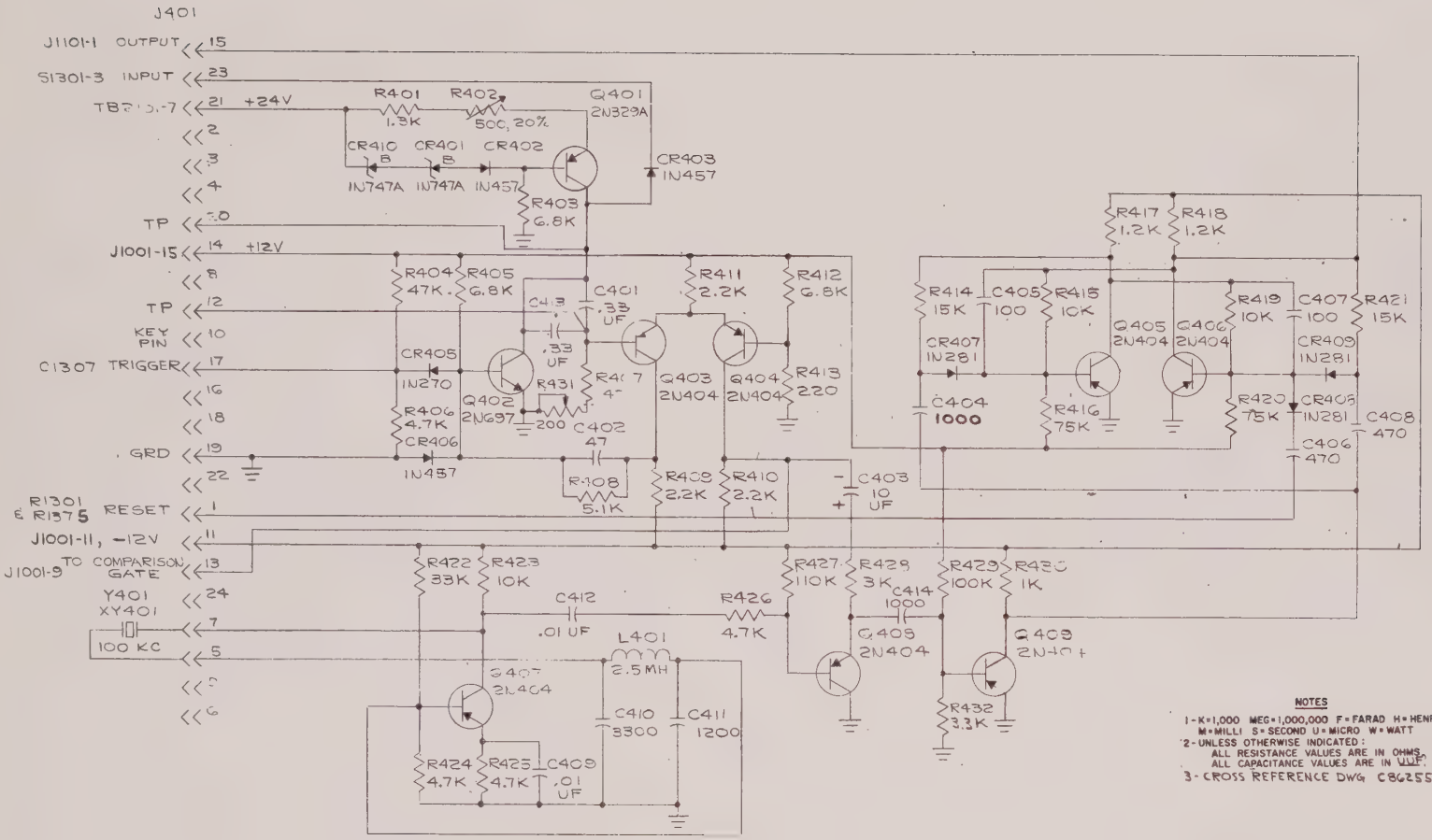

NOTES

1 - K = 1,000 MEG = 1,000,000 F = FARAD H = HENRY: M = MILLI S = SECOND U = MICRO W = WATT

2 - UNLESS OTHERWISE INDICATED: ALL RESISTANCE VALUES ARE IN OHMS, 1/2 W, 5%. ALL CAPACITANCE VALUES ARE IN UUF.

3 - CROSS REFERENCE DWG C8625532

CODE IDENT NO. 00000
ORDNANCE PART NO. 8625316

M8625349

Dwg. 86253416

Electrical Schematic Readout Converter (Part of Digital Voltmeter) A400

31 January 1963

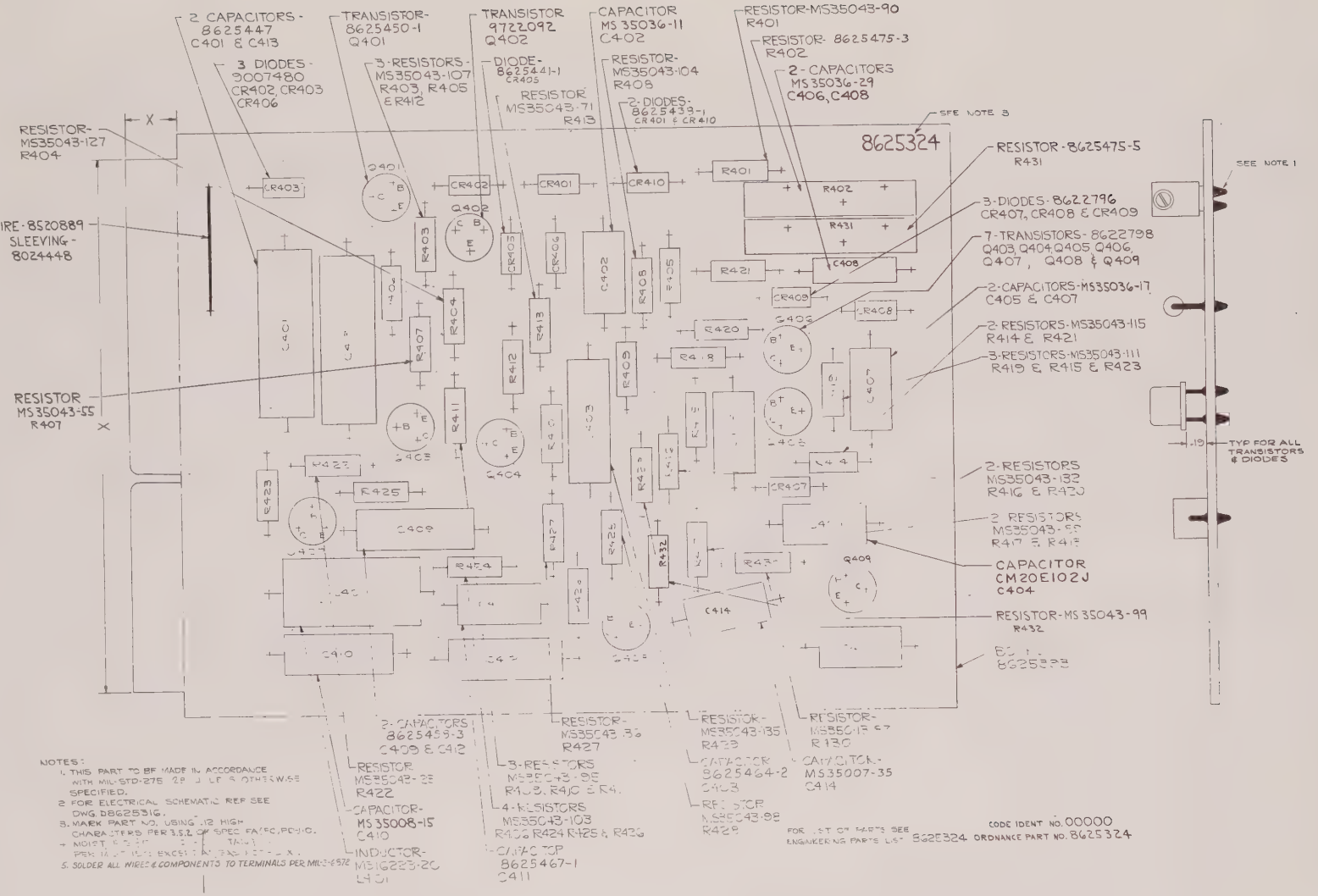

M8625349

31 January 1963

Component Board Assembly, A400

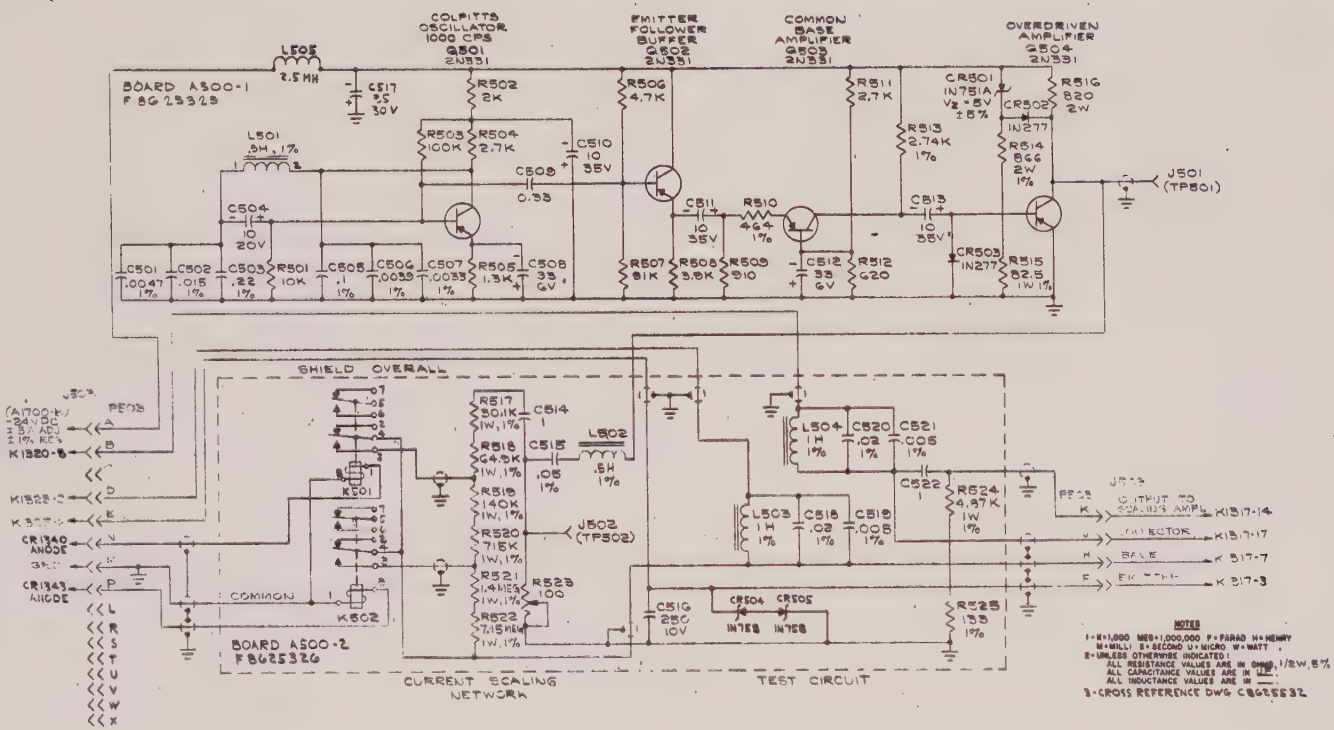

CODE IDENT NO. 00000
ORDNANCE PART NO. 8625317

31 January 1963

M8625349

Electrical Schematic Constant Signal
Current Source hfe Measurement A500

Dwg. 8625317

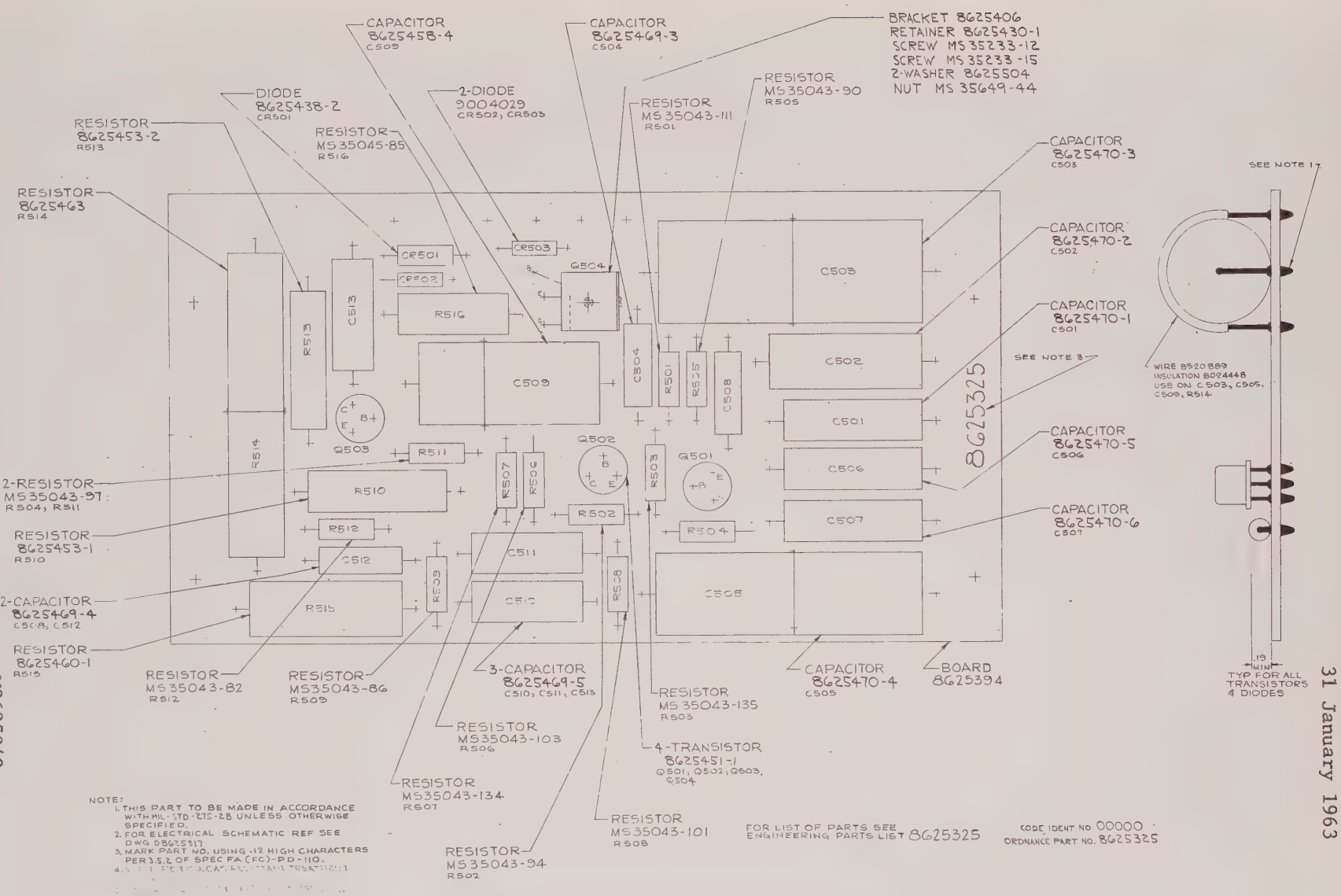

M8625349

31 January 1963

Component Board Assembly, A500-1

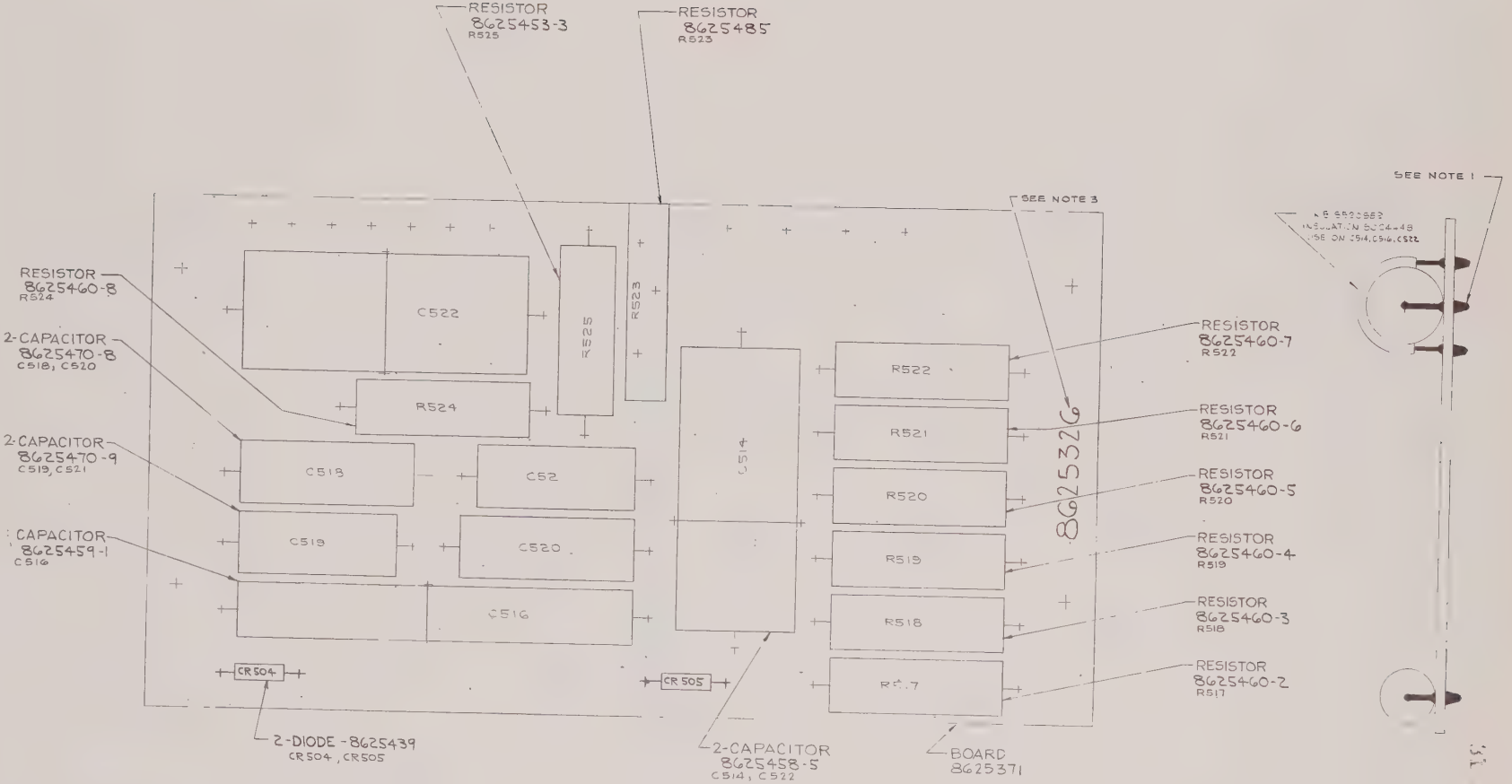

NOTE:
1. THIS PART TO BE MADE IN ACCORDANCE WITH MIL-STD-275 EXCEPT UNLESS OTHERWISE SPECIFIED.
2. FOR ELECTRICAL SCHEMATIC REF SEE DWG D8625317
3. MARK PART NO. USING .12 HIGH CHARACTERS PER 3.5.2 OF SPEC FA (FC)-PD 110.

FOR LIST OF PARTS-SEE ENGINEERING PARTS LIST 8625326

CODE IDENT NO. 00000
ORDNANCE PART NO. 8625326

M8625349

31 January 1963

Component Board Assembly, A500-2

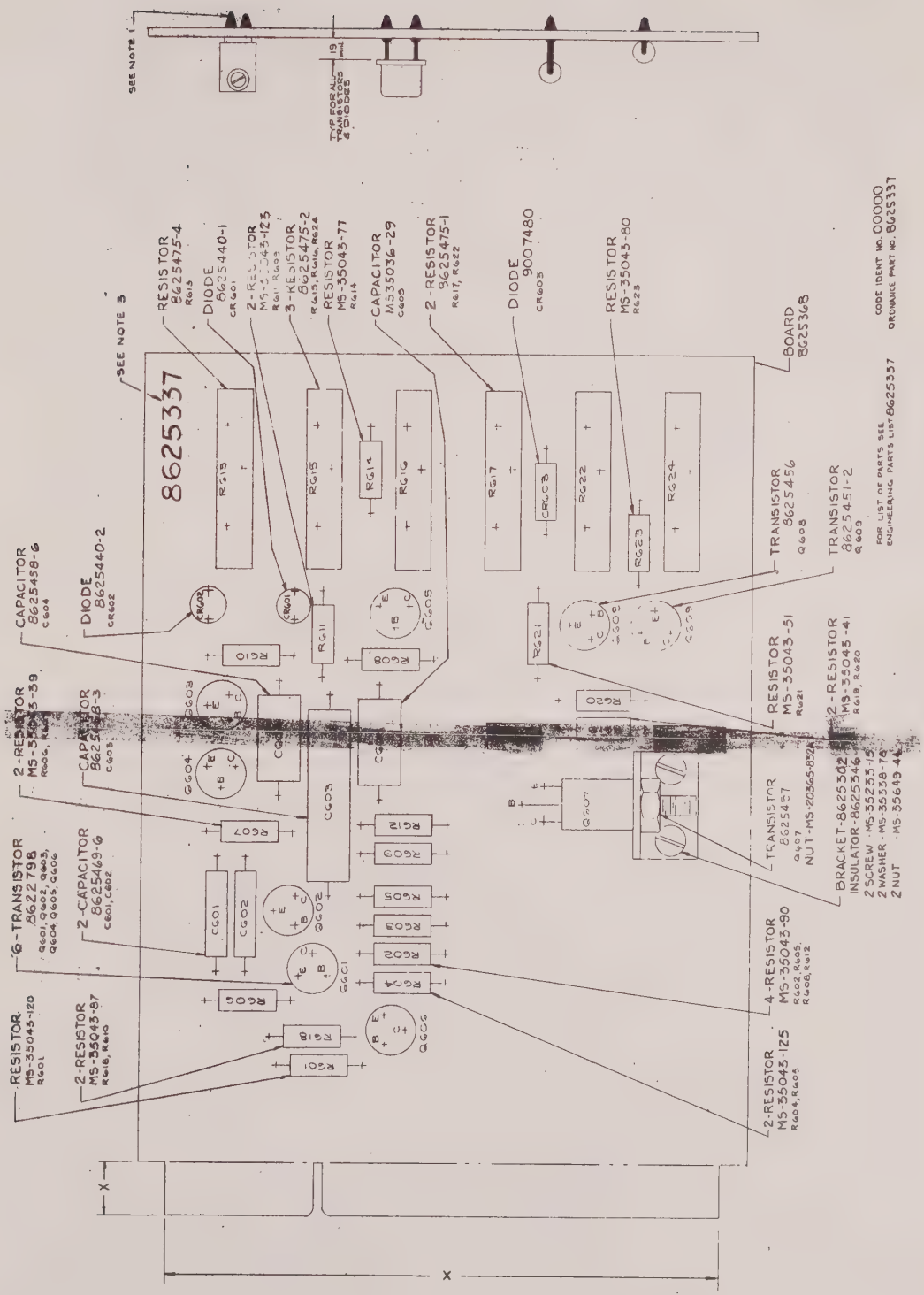

Component Board Assembly, A600

M8625349

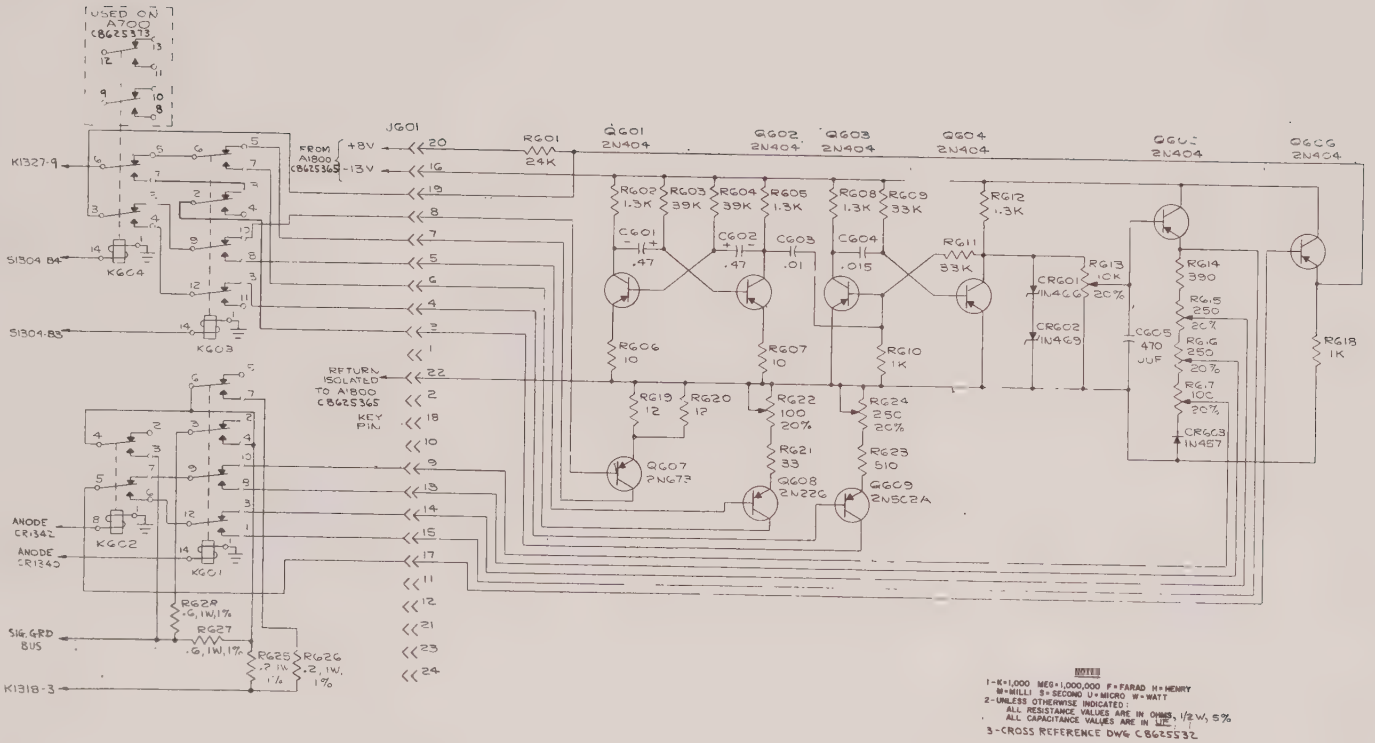

NOTES
1 - K = 1,000 MEG = 1,000,000 F = FARAD H = HENRY M = MILLI S = SECOND U = MICRO W = WATT
2 - UNLESS OTHERWISE INDICATED: ALL RESISTANCE VALUES ARE IN OHMS, 1/2 W, 5% ALL CAPACITANCE VALUES ARE IN MFD
3 - CROSS REFERENCE DWG CB625532

CODE IDENT NO. 00000
ORDNANCE PART NO. 8625318

Dwg. 8625318

Electrical Schematic h_{FE} Test Circuit 1.25 MA
To 1 Amp Pulse for Base Drive A-600

M8625349

31 January 1963

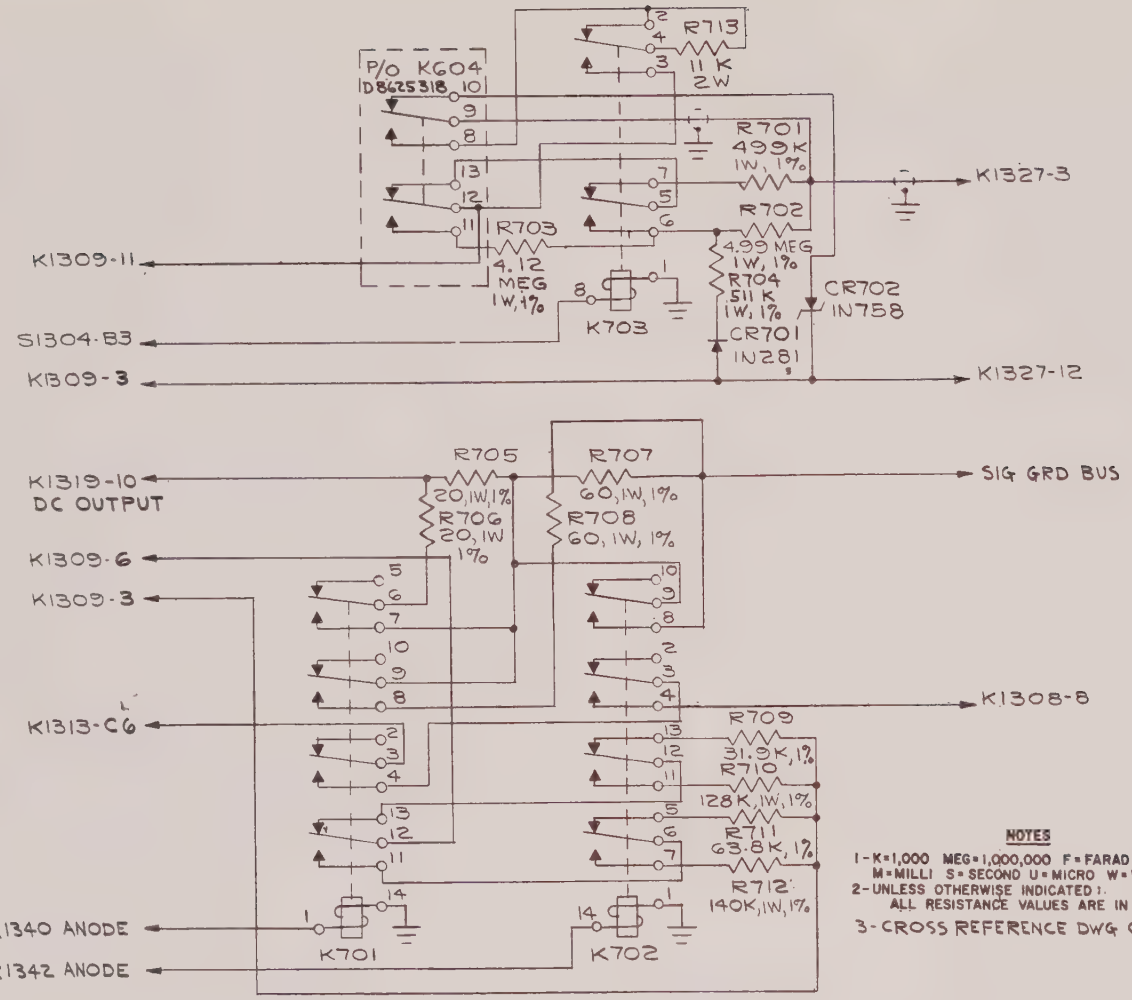

NOTES

1 - K = 1,000 MEG = 1,000,000 F = FARAD H = HENRY
M = MILLI S = SECOND U = MICRO W = WATT
2 - UNLESS OTHERWISE INDICATED :
ALL RESISTANCE VALUES ARE IN OHMS, 1/2W, 5%
3 - CROSS REFERENCE DWG C8625532

CODE IDENT NO. 00000
ORDNANCE PART NO. 8625373

Electrical Schematic Large Signal Beta (h_{FE} Test Circuit (DC) A700

Dwg. 8625373

M8625349

31 January 1963

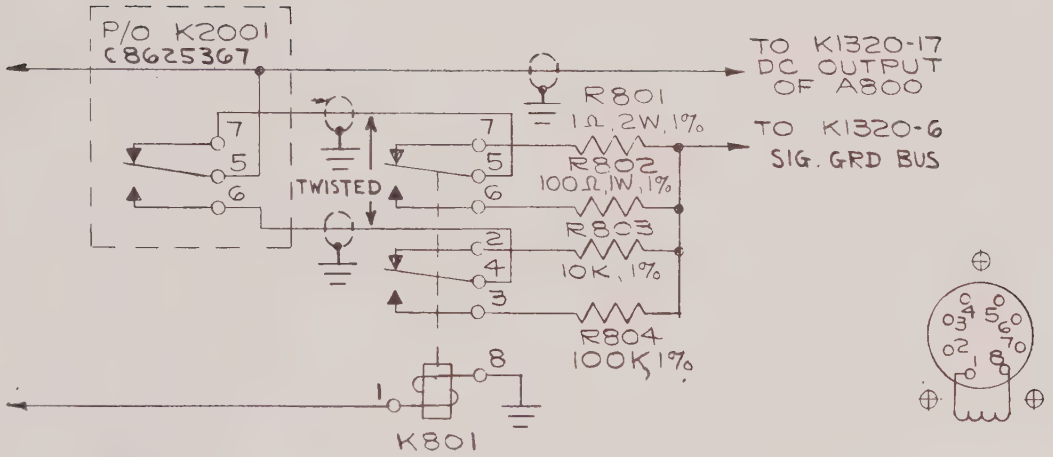

NOTES

1-K=1,000 MEG=1,000,000 F=FARAD H=HENRY
M=MILLI S=SECOND U=MICRO W=WATT
2-UNLESS OTHERWISE INDICATED:
ALL RESISTANCE VALUES ARE IN OHMS. ½W,
3-CROSS REFERENCE DWG C8625532

CODE IDENT NO. 00000
ORDNANCE PART NO. 8625372

Dwg. 8625372

Electrical Schematic Current for Applied
Voltage Test Circuit A808

M8625349

31 January 1963

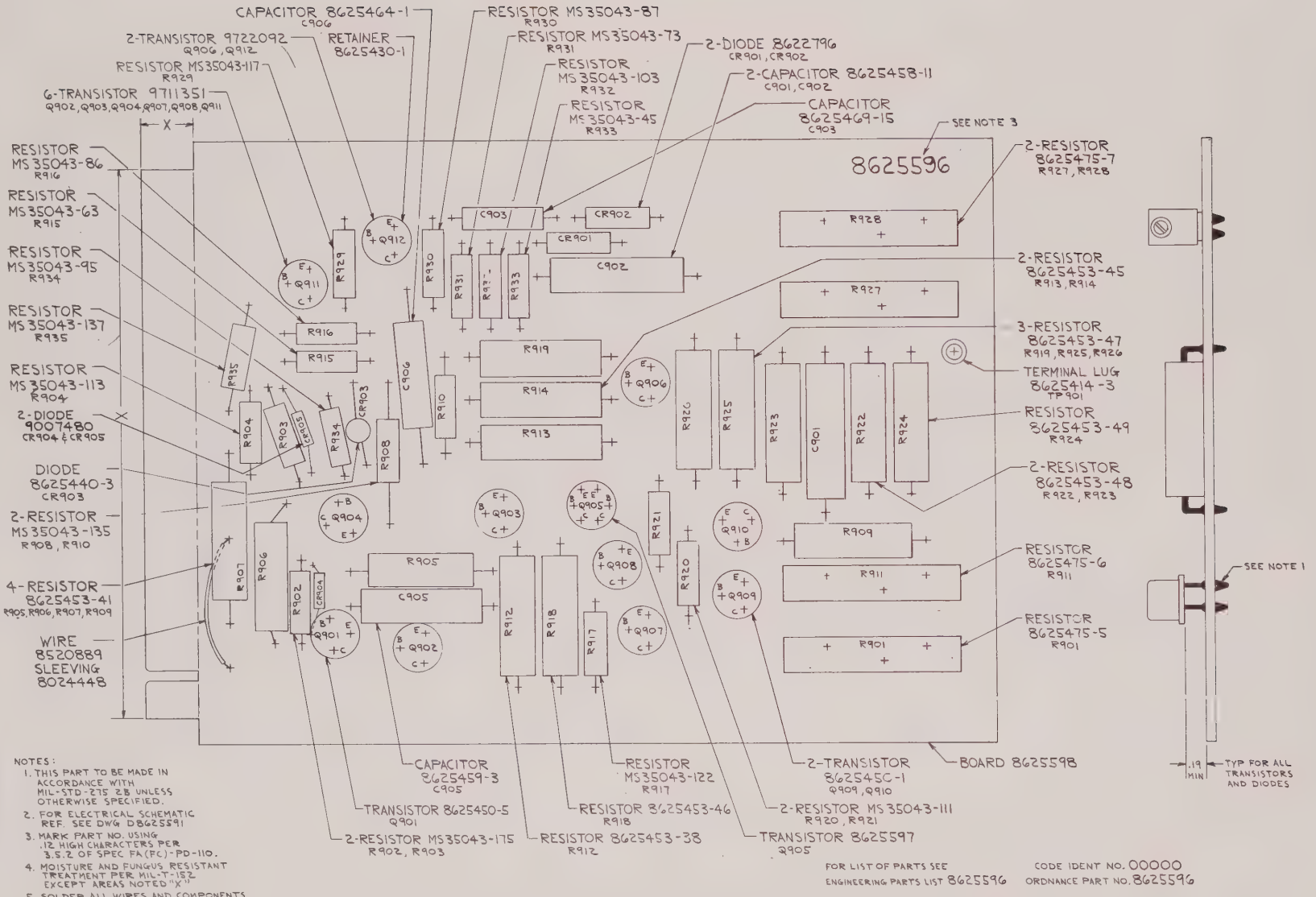

NOTES:
1. THIS PART TO BE MADE IN ACCORDANCE WITH MIL-STD-275 2B UNLESS OTHERWISE SPECIFIED.
2. FOR ELECTRICAL SCHEMATIC REF. SEE DWG D8625591
3. MARK PART NO. USING .12 HIGH CHARACTERS PER 3.5.2 OF SPEC FA(FC)-PD-110.
4. MOISTURE AND FUNGUS RESISTANT TREATMENT PER MIL-T-152 EXCEPT AREAS NOTED "X"
5. SOLDER ALL WIRES AND COMPONENTS TO TERMINALS PER MIL-S-6872.

FOR LIST OF PARTS SEE ENGINEERING PARTS LIST 8625596

CODE IDENT NO. 00000
ORDNANCE PART NO. 8625596

M8625349

31 January 1963

Component Board Assembly A900

Dwg 8625596

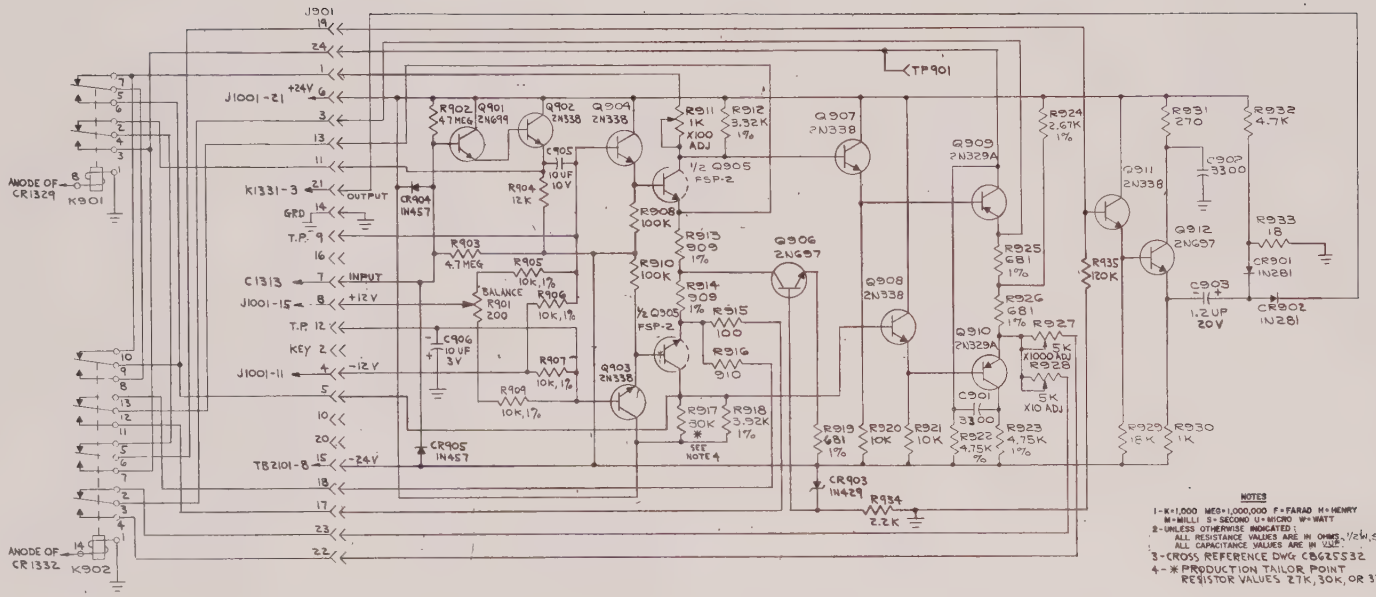

CODE IDENT NO. 00000
ORDNANCE PART NO. 8625591

Dwg. 8625591

Electrical Schematic Precision Scaling Ampl. A900

M8625349

31 January 1963

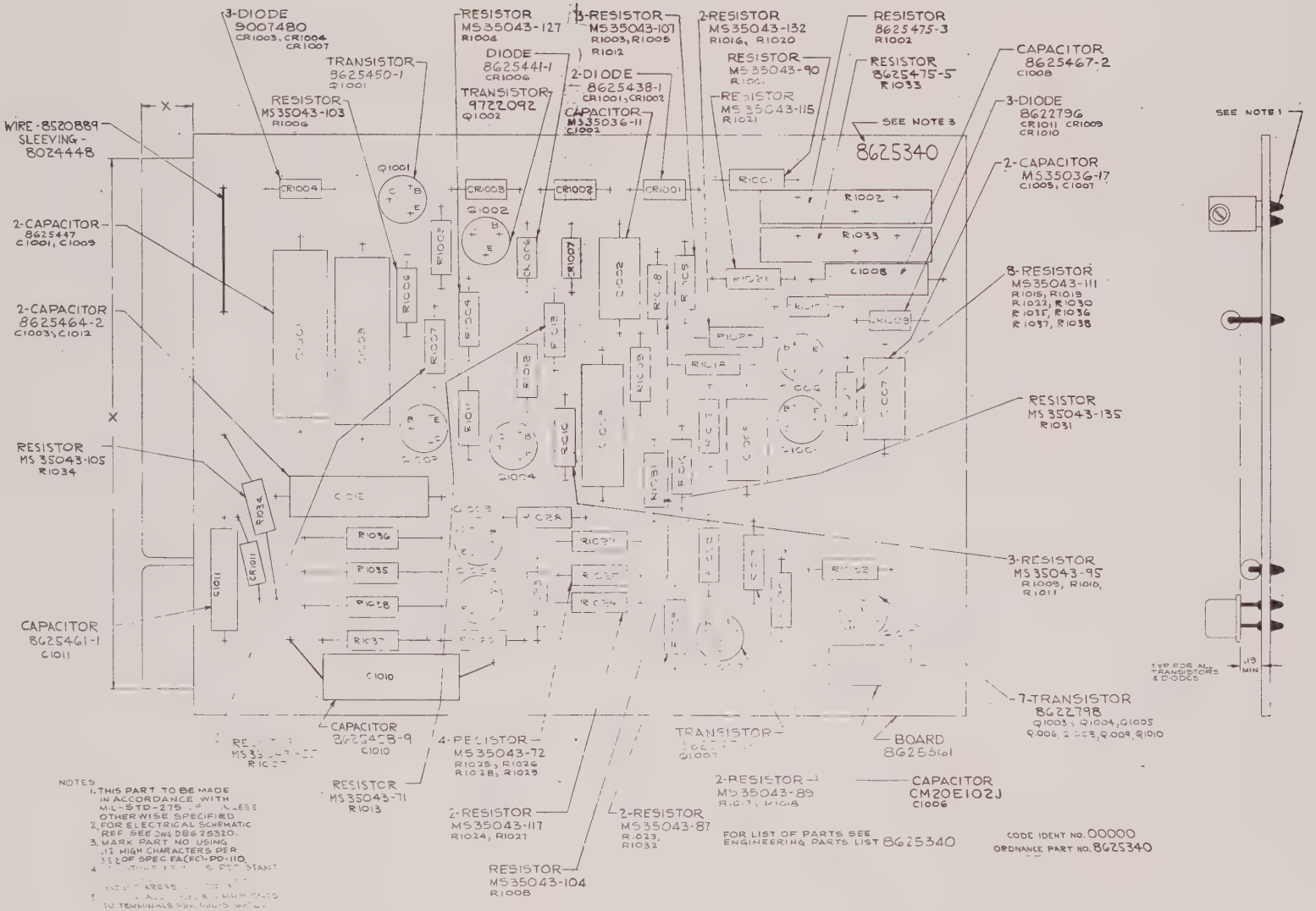

Component Board Assembly A1000

Dwg. 8625340

M8625349

31 January 1963

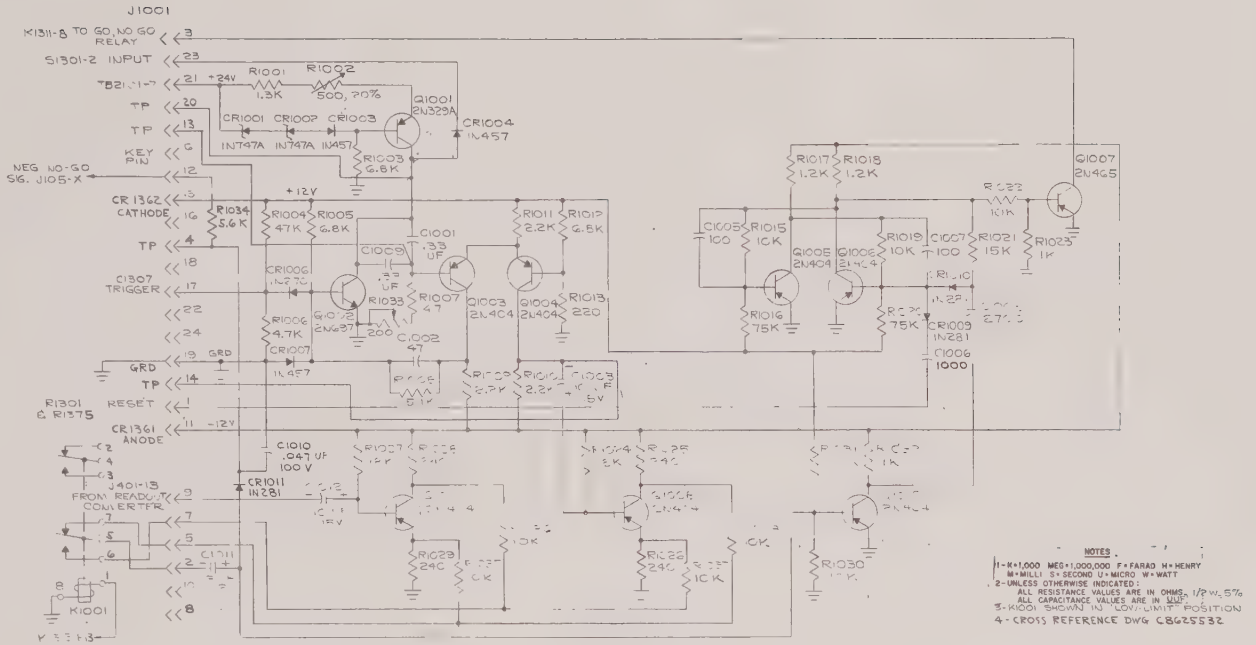

NOTES

1 - K=1,000 MEG=1,000,000 F=FARAD H=HENRY M=MILLI S=SECOND U=MICRO W=WATT
2 - UNLESS OTHERWISE INDICATED: ALL RESISTANCE VALUES ARE IN OHMS, 1/2 W, 5% ALL CAPACITANCE VALUES ARE IN MFD
3 - K1001 SHOWN IN LOW UNIT POSITION
4 - CROSS REFERENCE DWG C8625532

CODE IDENT NO. 00000
ORDNANCE PART NO. 8625320

M8625349

31 January 1963

Electrical Schematic Comparison Converter A1000

Dwg. 8625320

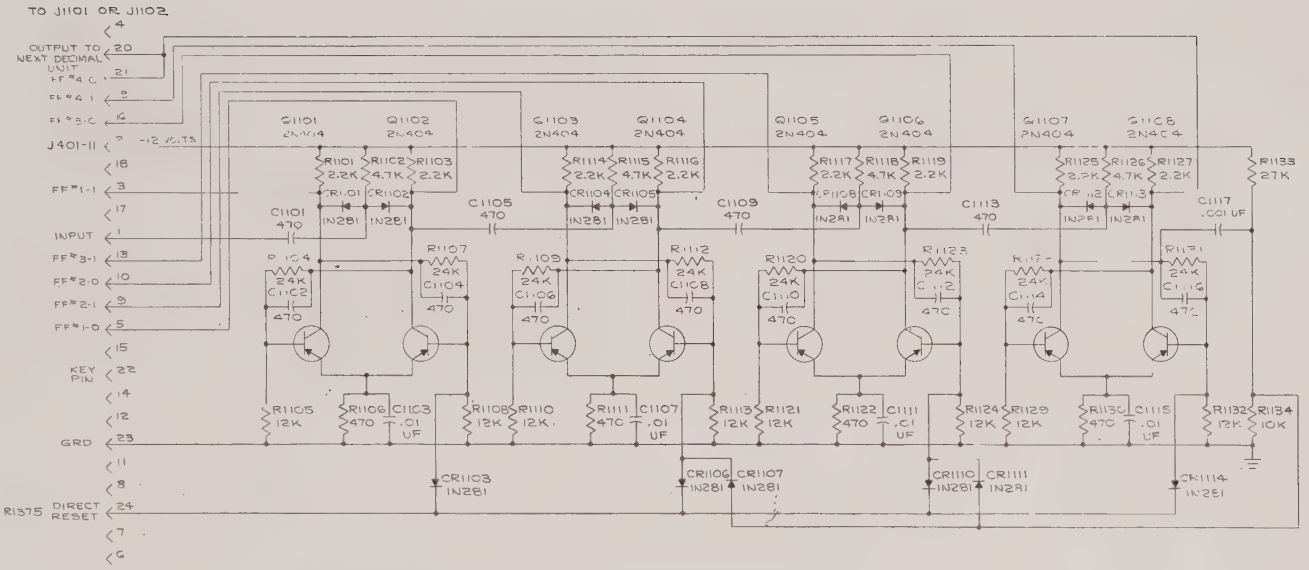

NOTES

1 - K = 1,000 MEG = 1,000,000 F = FARAD H = HENRY
M = MILLI S = SECOND U = MICRO W = WATT
2 - UNLESS OTHERWISE INDICATED:
ALL RESISTANCE VALUES ARE IN OHMS, 1/2 W, 5%.
ALL CAPACITANCE VALUES ARE IN MMF.
3 - CROSS REFERENCE DWG C8625532

CODE IDENT NO. 00000
ORDNANCE PART NO. 8625321

M8625349

31 January 1963

Dwg. 8625321

Electrical Schematic Readout Counter A1100

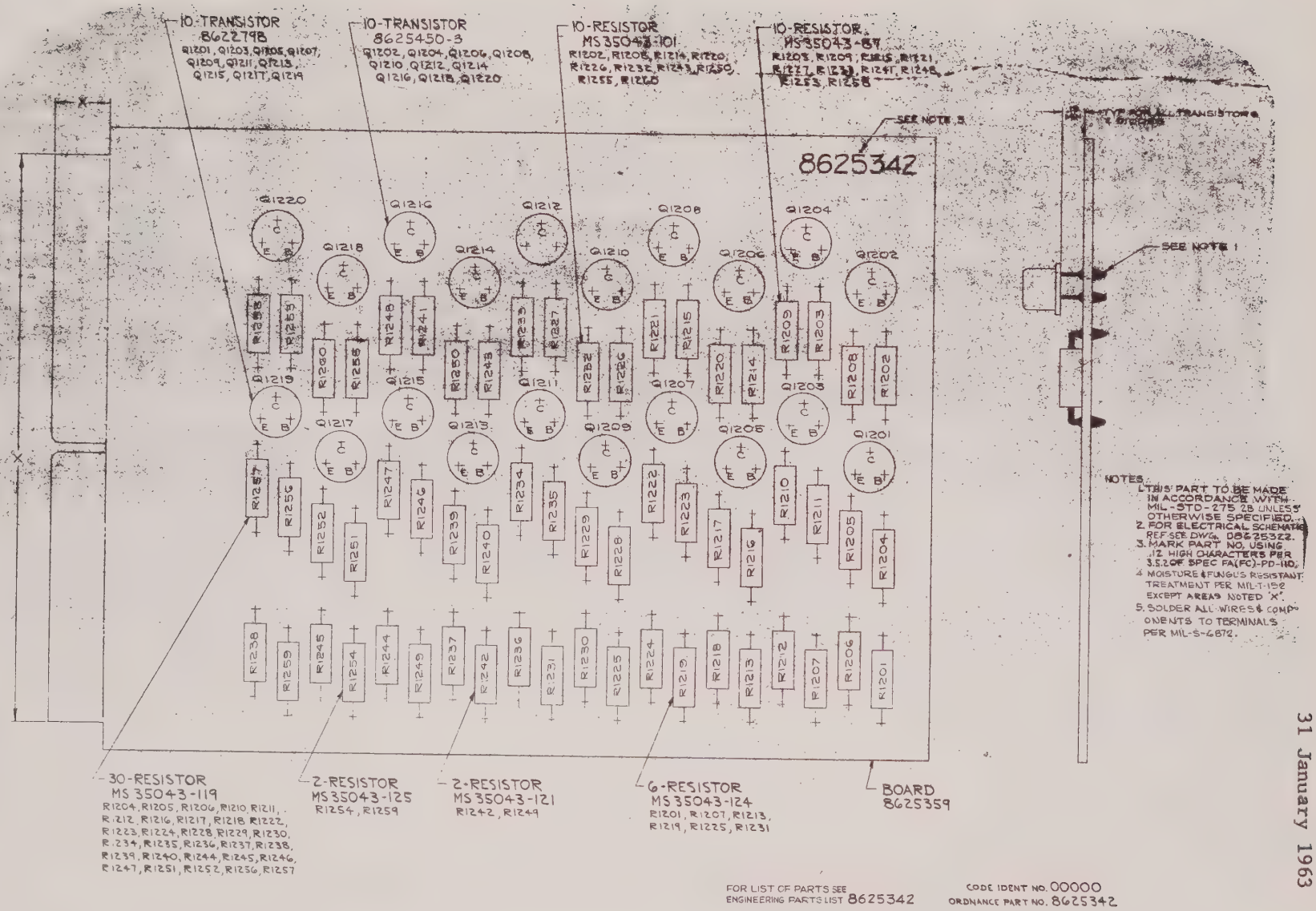

FOR LIST OF PARTS SEE ENGINEERING PARTS LIST 8625342

CODE IDENT NO. 00000
ORDNANCE PART NO. 8625342

M8625349

31 January 1963

Component Board Assembly A1200

Dwg. 8625342

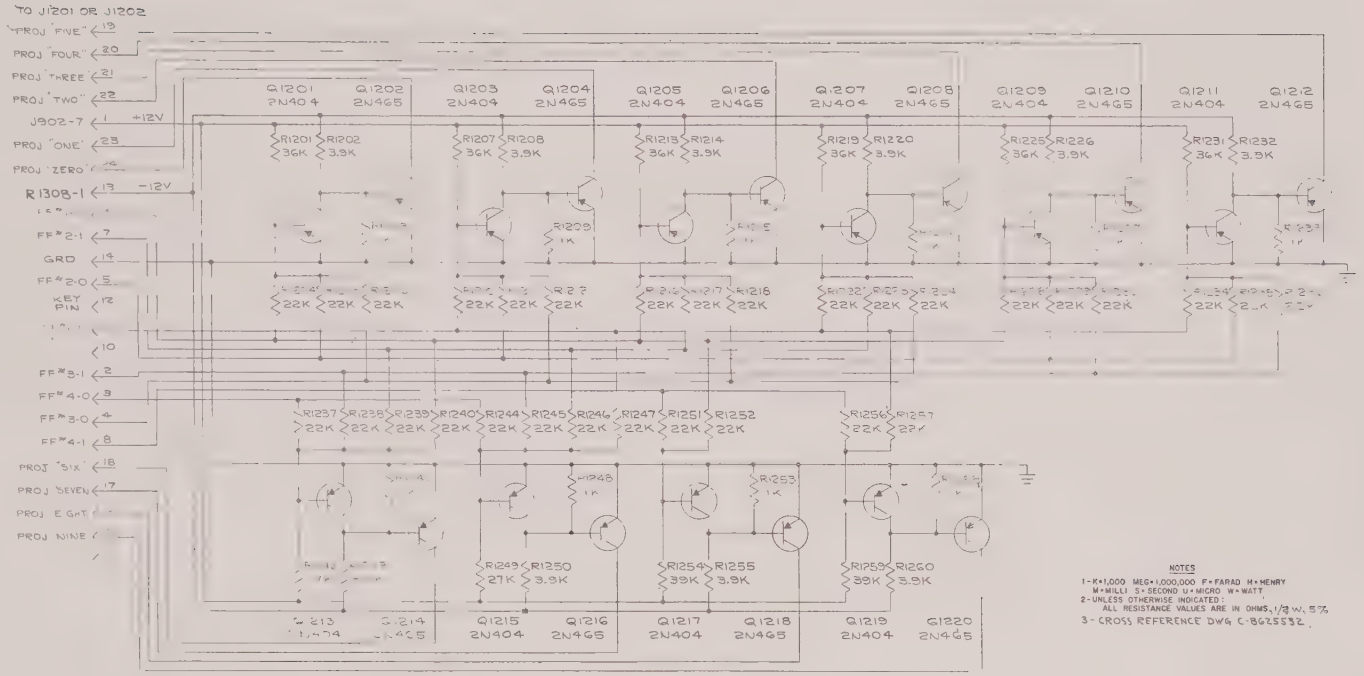

NOTES
1 - K = 1,000 MEG = 1,000,000 F = FARAD H = HENRY
M = MILLI S = SECOND U = MICRO W = WATT
2 - UNLESS OTHERWISE INDICATED:
ALL RESISTANCE VALUES ARE IN OHMS, 1/2 W, 5%
3 - CROSS REFERENCE DWG C-8625532

CODE IDENT NO. 00000
ORDNANCE PART NO. 8625322

M8625349

31 January 1963

Electrical Schematic Light Driver A1200

Dwg. 8625322

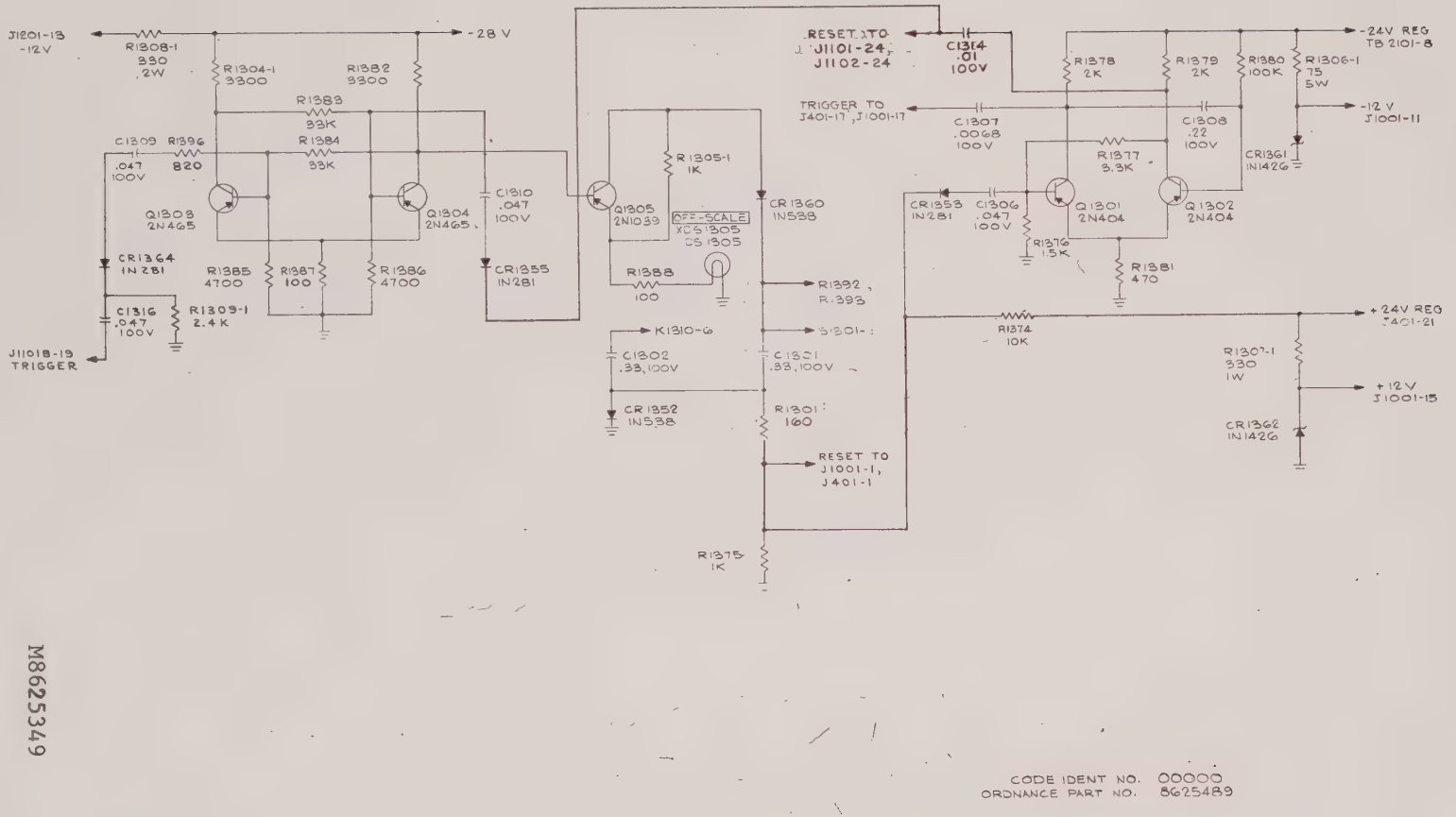

CODE IDENT NO. 00000
ORDNANCE PART NO. 8625489

M8625349

31 January 1963

Electrical Diagram. Program Control A1300

Dwg. 8625489

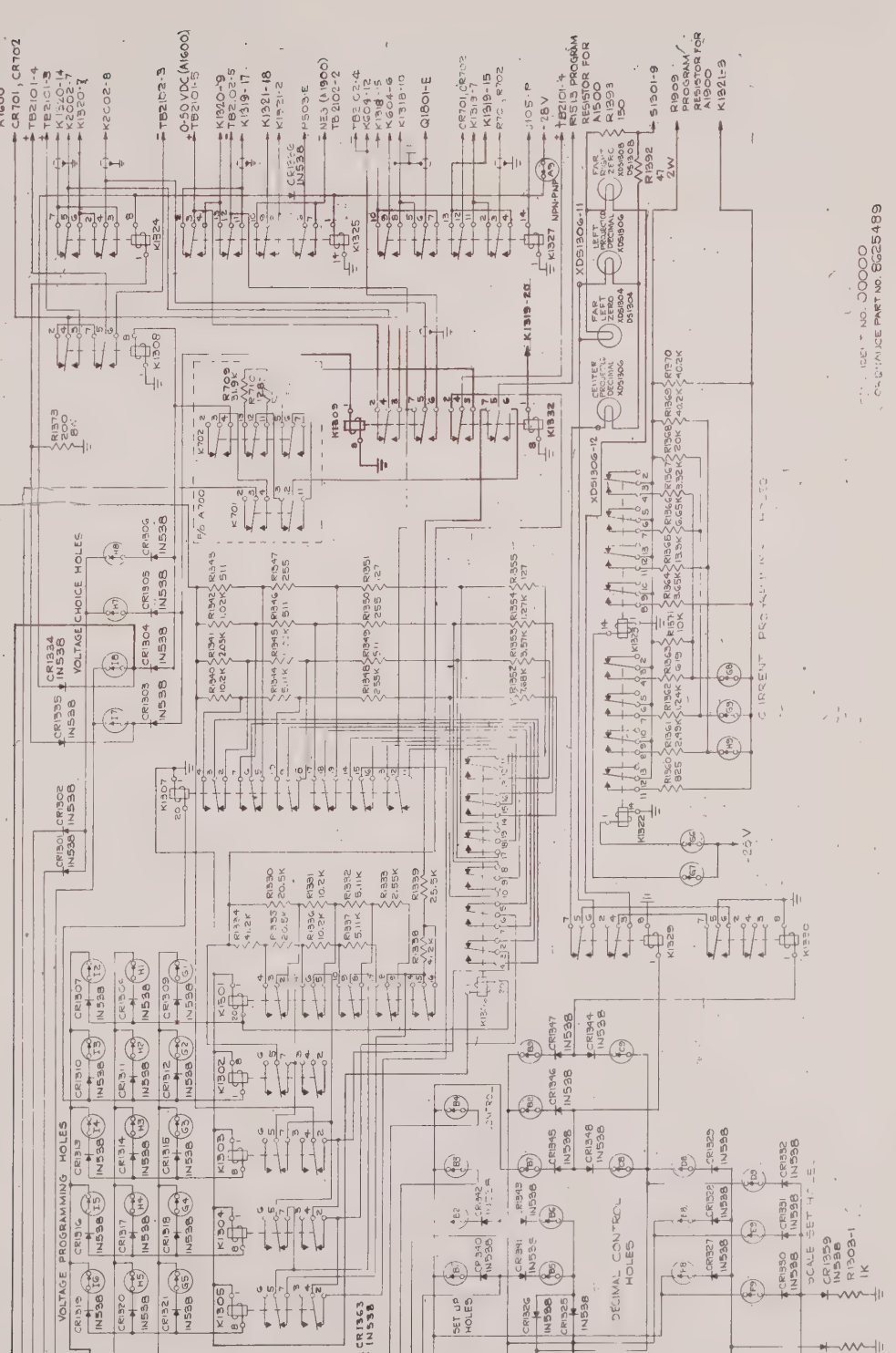

Electrical Diagram Program Control, A1300

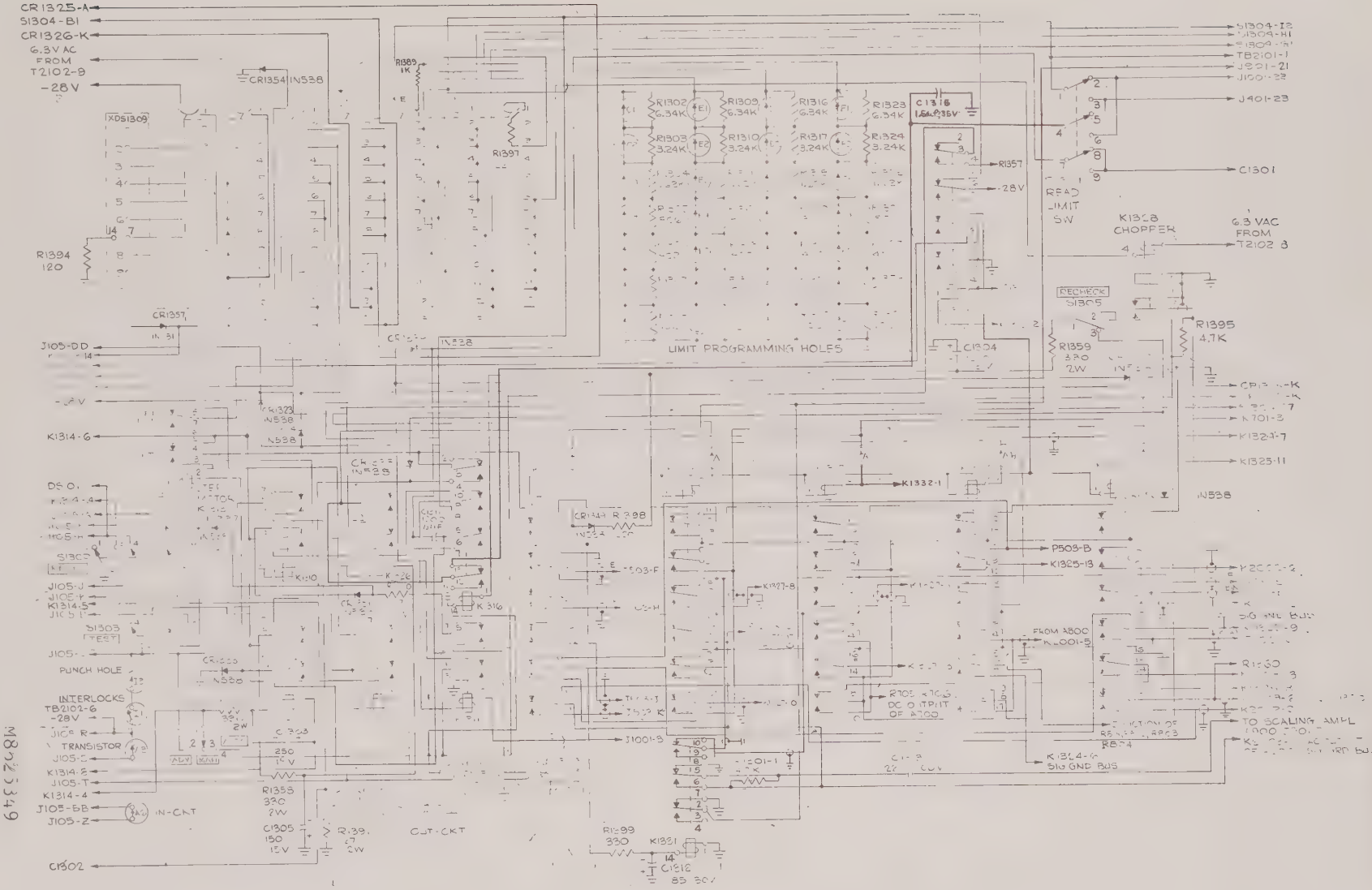

Electrical Diagram Program Control A1300

Dwg. 8625489

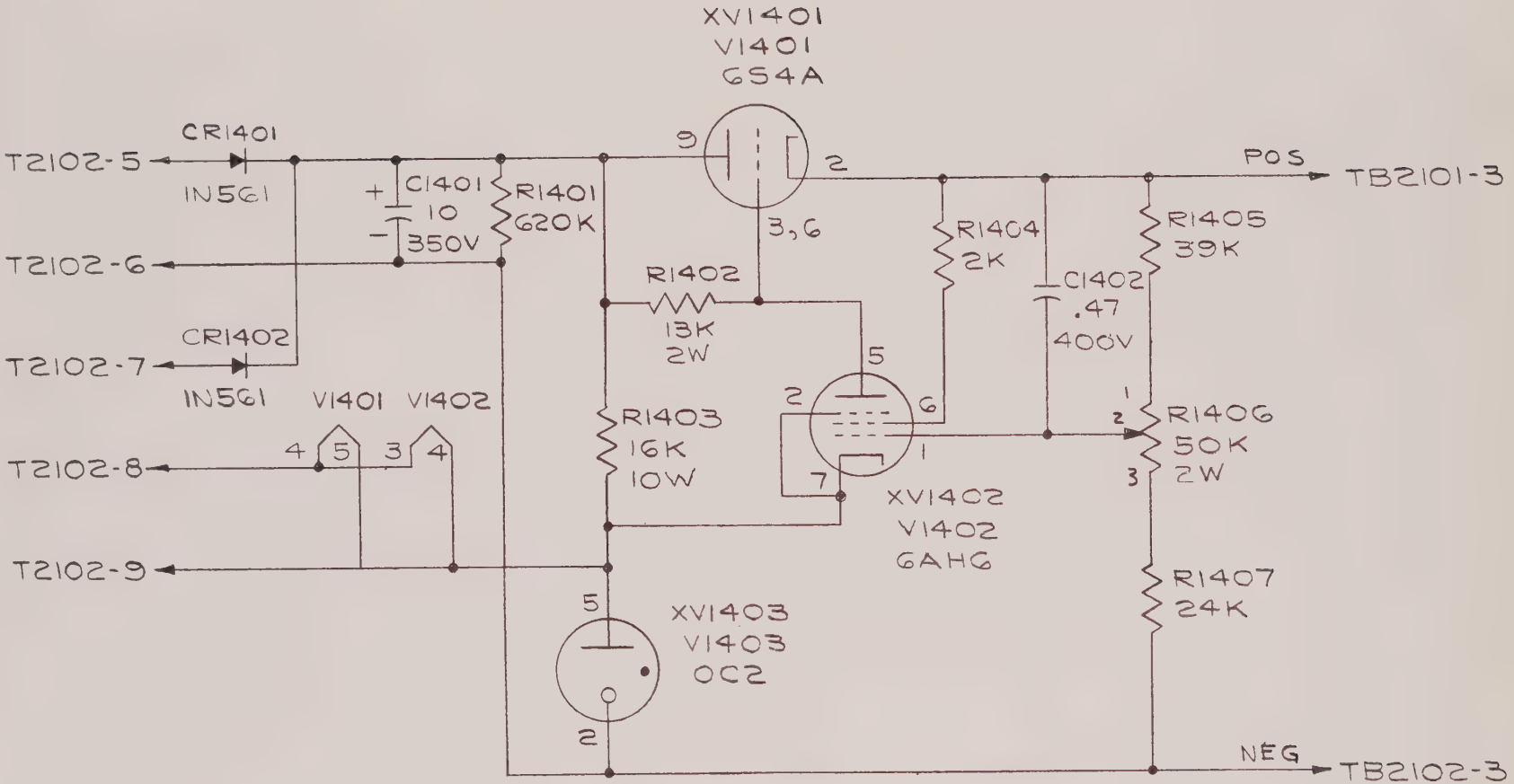

NOTES

1-K=1,000 MEG=1,000,000 F=FARAD H=HENRY
M=MILLI S=SECOND U=MICRO W=WATT

2-UNLESS OTHERWISE INDICATED:
ALL RESISTANCE VALUES ARE IN OHMS, 1/2W, 5%
ALL CAPACITANCE VALUES ARE IN UF.

3-CROSS REFERENCE DWG C8625532

M8625349

CODE IDENT NO. 00000

ORDNANCE PART NO. 8625375

Dwg. 8625375

Electrical Schematic Fixed High Voltage Power Supply +225V A1400

3 January 1963

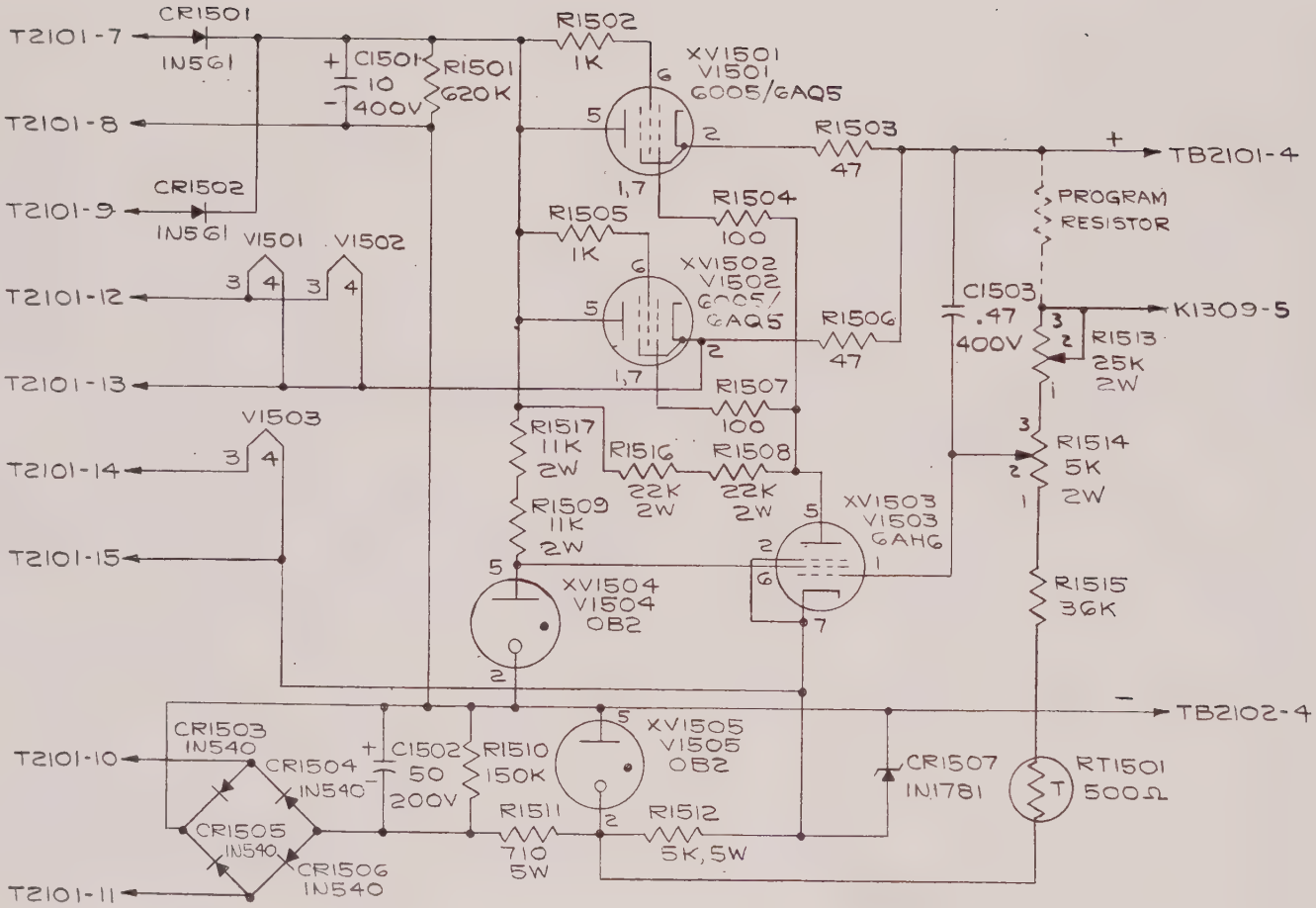

NOTES

1-K=1,000 MEG=1,000,000 F=FARAD H=HENRY
M=MILLI S=SECOND U=MICRO W=WATT
2-UNLESS OTHERWISE INDICATED:
ALL RESISTANCE VALUES ARE IN OHMS. ½W, 5%
ALL CAPACITANCE VALUES ARE IN UF.
3-CROSS REFERENCE DWG C8625532

CODE IDENT NO. 00000
ORDNANCE PART NO. 8625377

Electrical Schematic Programed High Voltage Power Supply A1500

Dwg. 8625377

M8625349

31 January 1963

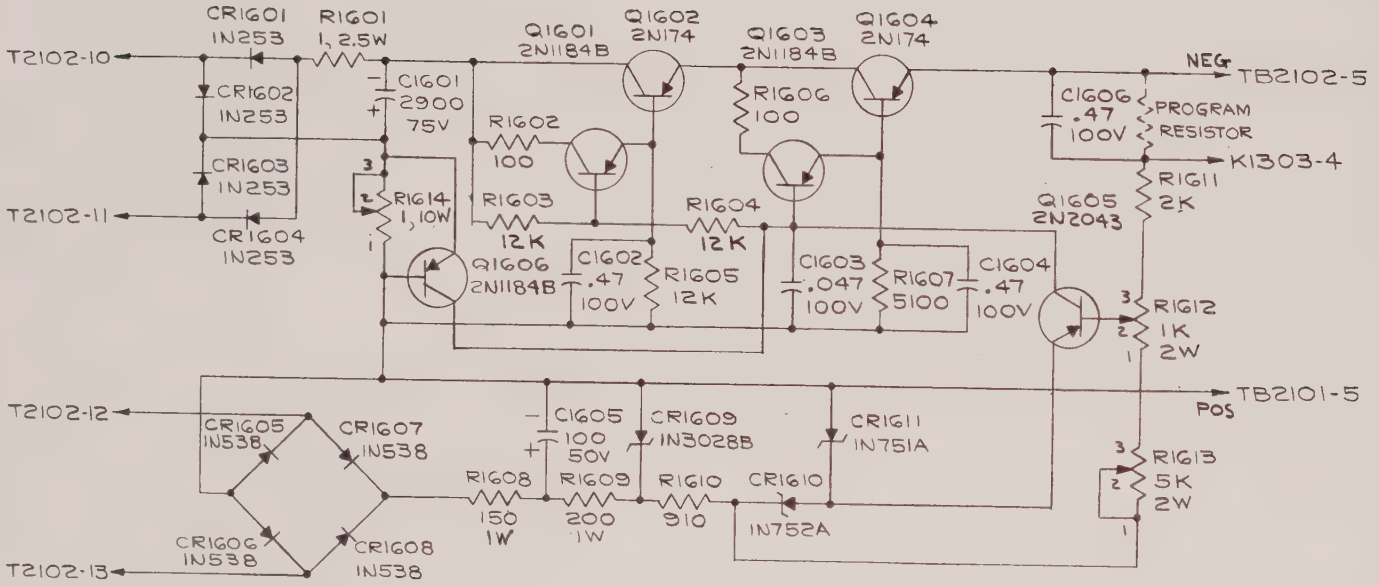

NOTES

1-K=1,000 MEG=1,000,000 F=FARAD H=HENRY
M=MILLI S=SECOND U=MICRO W=WATT

2-UNLESS OTHERWISE INDICATED:
ALL RESISTANCE VALUES ARE IN OHMS, 1/2W, 5%
ALL CAPACITANCE VALUES ARE IN UF.

3-CROSS REFERENCE DWG C8625532

M8625349

CODE IDENT NO. 00000
ORDNANCE PART NO. 8625376

31 January 1963

Electrical Schematic 0-50V Prog. Low Voltage
Power Supply A1600

Dwg. 8625376

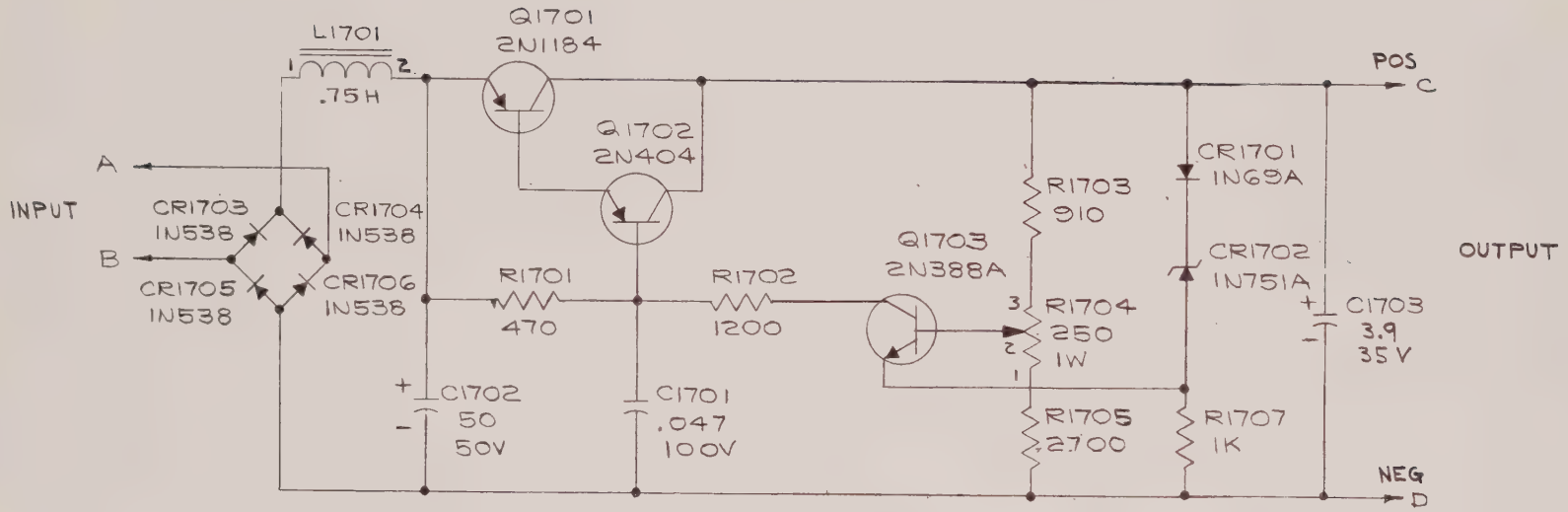

INPUT AND OUTPUT CONNECTIONS

SUPPLY	A	B	C	D	R1704
+24V	T2101-16	T2101-17	TB2101-7	TB2102-7	R1704A
-24V	T2101-18	T2101-19	TB2102-8	TB2101-8	R1704B

NOTES

1 - K = 1,000 MEG = 1,000,000 F = FARAD H = HENRY
M = MILLI S = SECOND U = MICRO W = WATT
2 - UNLESS OTHERWISE INDICATED:
ALL RESISTANCE VALUES ARE IN OHMS, 1/2 W, 5%
ALL CAPACITANCE VALUES ARE IN UF.
3 - CROSS REFERENCE DWG C8625532

CODE IDENT NO. 00000
ORDNANCE PART NO. 8625323

Electrical Schematic ±24 Volt Service Supply A1700

Dwg. 8625323

M8625349

31 January 1963

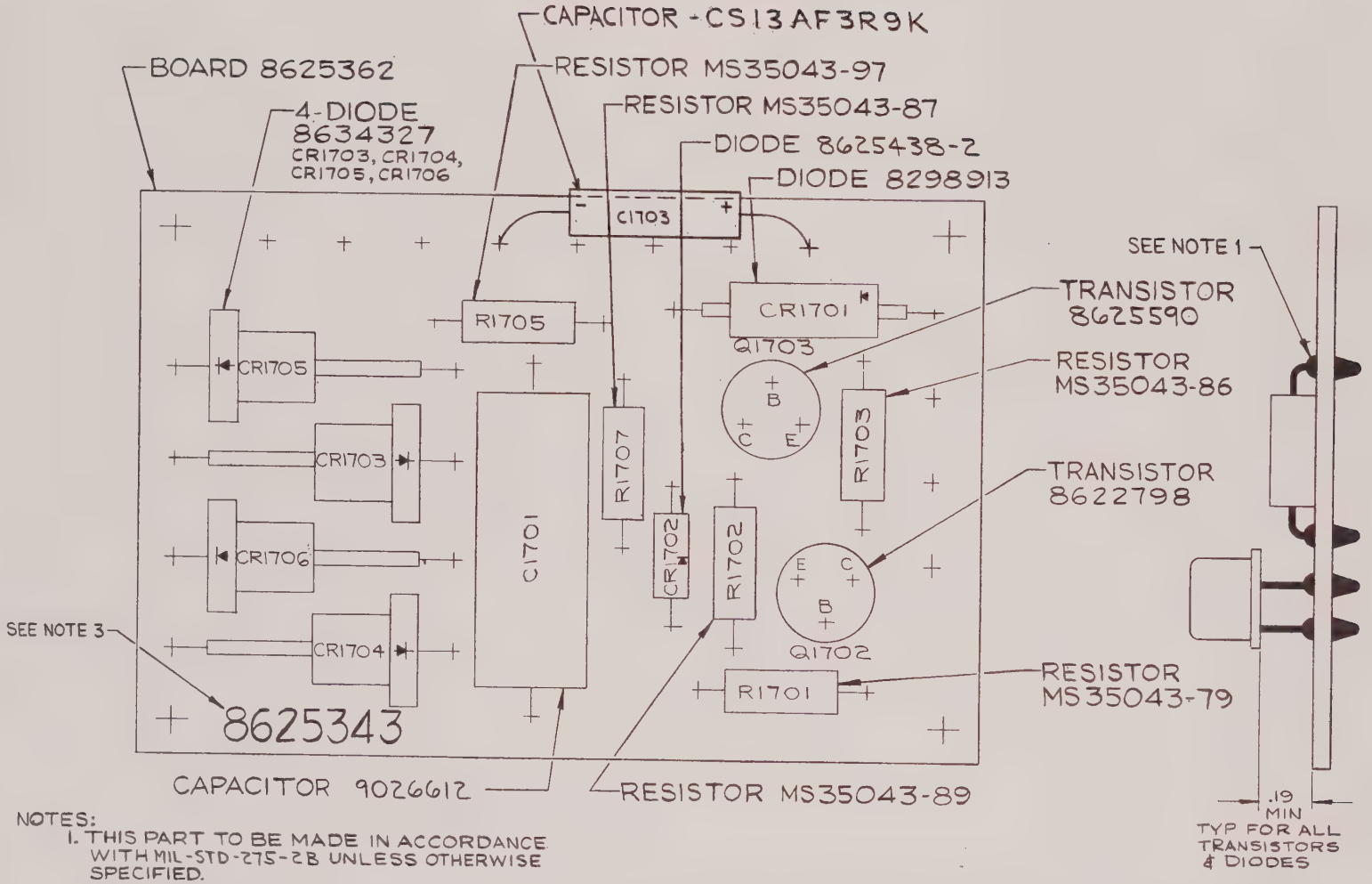

NOTES:

1. THIS PART TO BE MADE IN ACCORDANCE WITH MIL-STD-275-2B UNLESS OTHERWISE SPECIFIED.
2. FOR ELECTRICAL SCHEMATIC REF SEE DWG C8625323
3. MARK PART NO. USING .12 HIGH CHARACTERS PER 3.5.2 OF SPEC FA(FC)-PD-110.
4. MOISTURE AND FUNGAS RESISTANT TREATMENT PER MIL-T-152
5. SOLDERING ALL WIRES AND COMPONENTS TO TERMINALS PER MIL-S-6872

FOR LIST OF PARTS SEE ENGINEERING PARTS LIST 8625343

CODE IDENT NO. 00000
ORDNANCE PART NO. 8625343

Component Board Assembly A1700

Dwg. 8625343

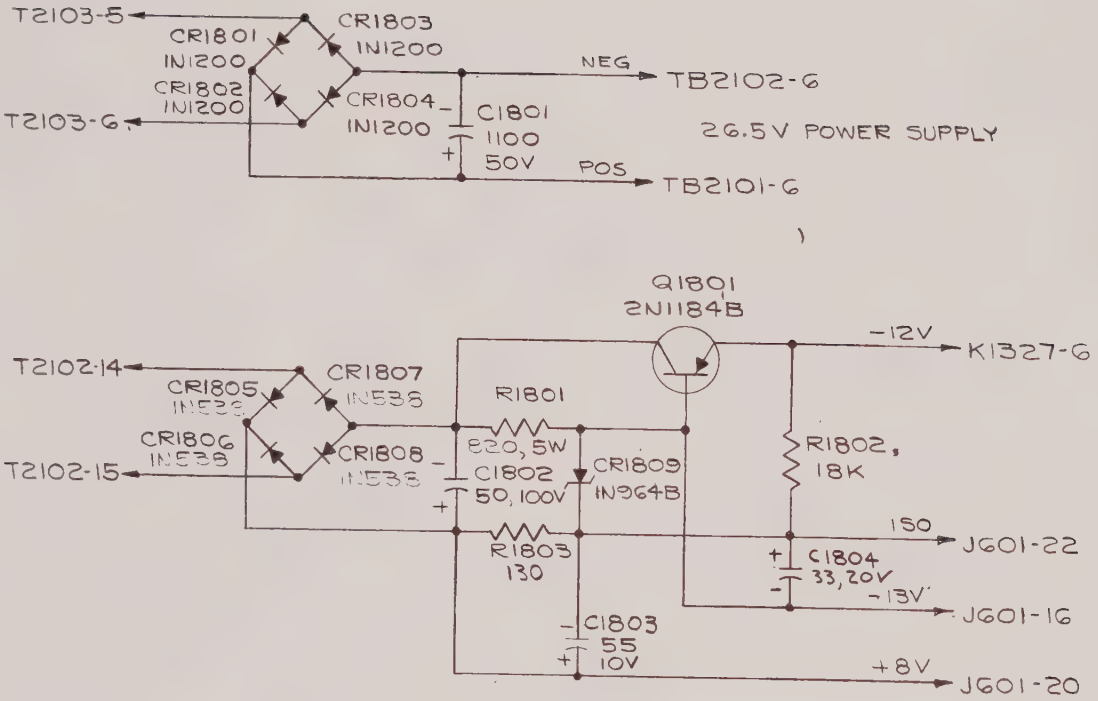

NOTES

1 - K = 1,000 MEG = 1,000,000 F = FARAD H = HENRY
M = MILLI S = SECOND U = MICRO W = WATT

2 - UNLESS OTHERWISE INDICATED:
ALL RESISTANCE VALUES ARE IN OHMS, 1/2W, 5%
ALL CAPACITANCE VALUES ARE IN UF.

3 - CROSS REFERENCE DWG C8625532

CODE IDENT NO. 00000
ORDNANCE PART NO. 8625365

Electrical Schematic Supplementary Power Supply A1800

Dwg. 8625365

M8625349

31 January 1963

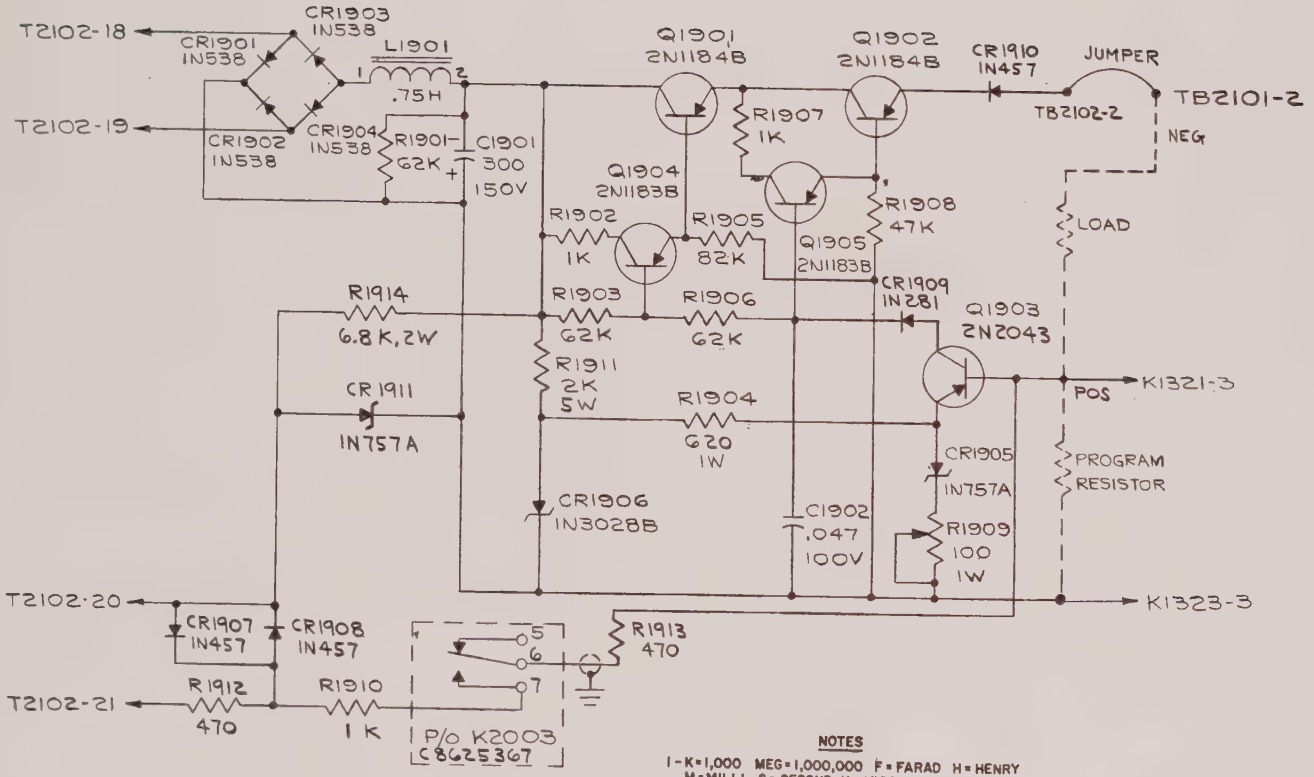

NOTES

1-K=1,000 MEG=1,000,000 F=FARAD H=HENRY
M=MILLI S=SECOND U=MICRO W=WATT

2-UNLESS OTHERWISE INDICATED:
ALL RESISTANCE VALUES ARE IN OHMS, 1/2W, 5%
ALL CAPACITANCE VALUES ARE IN UF.

3-CROSS REFERENCE DWG C8625532

CODE IDENT NO. 00000
ORDNANCE PART NO. 8625363

Electrical Schematic Regulated Current Supply A1900

Dwg. 8625349

M8625349

31 January 1963

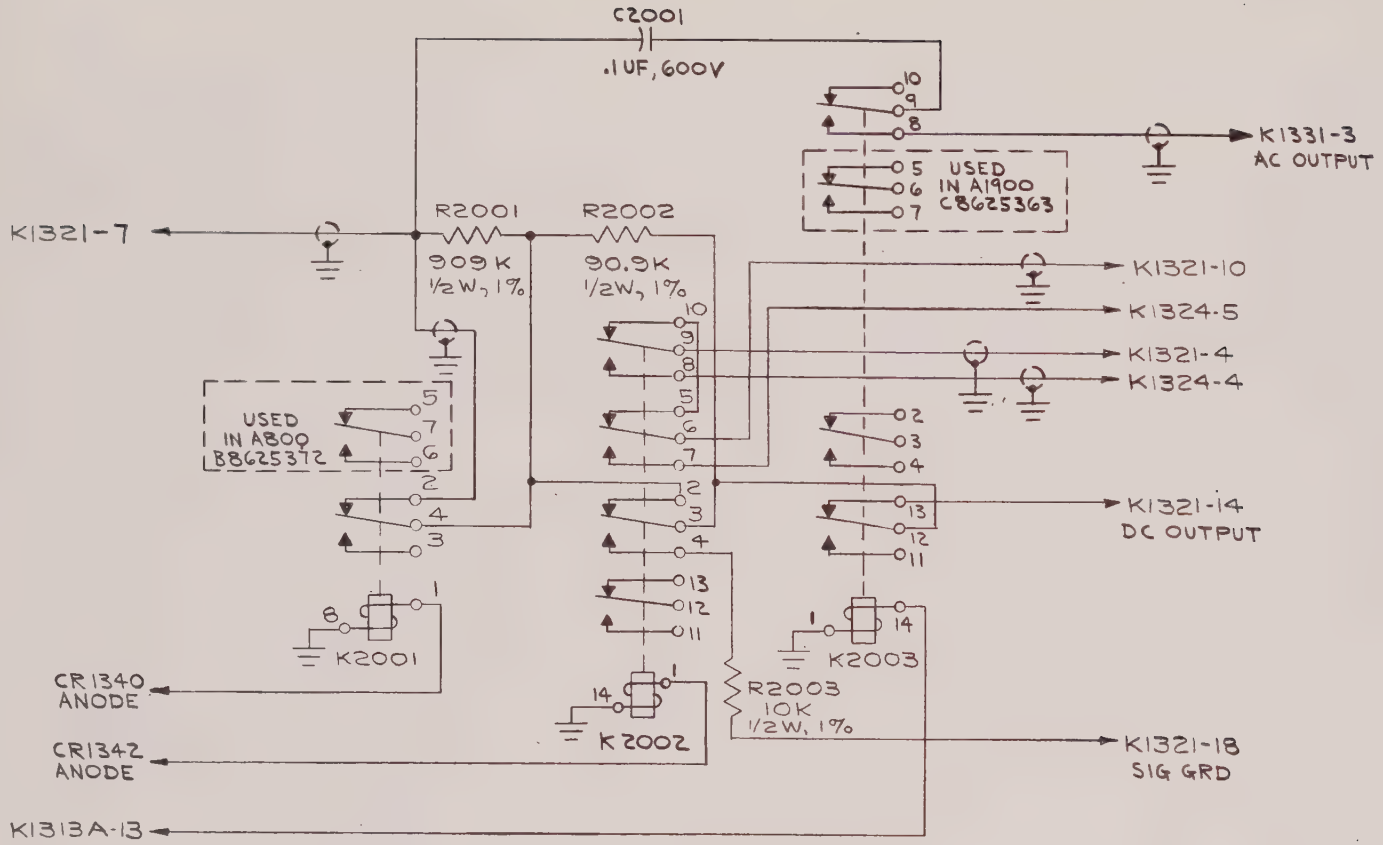

NOTE:
1. CROSS REFERENCE DWG C8625532

M8625367

31 January 1963

CODE IDENT NO. 00000
ORDNANCE PART NO. 8625367

Electrical Schematic Zener Diode Test Circuit A2000

Dwg. 8625367

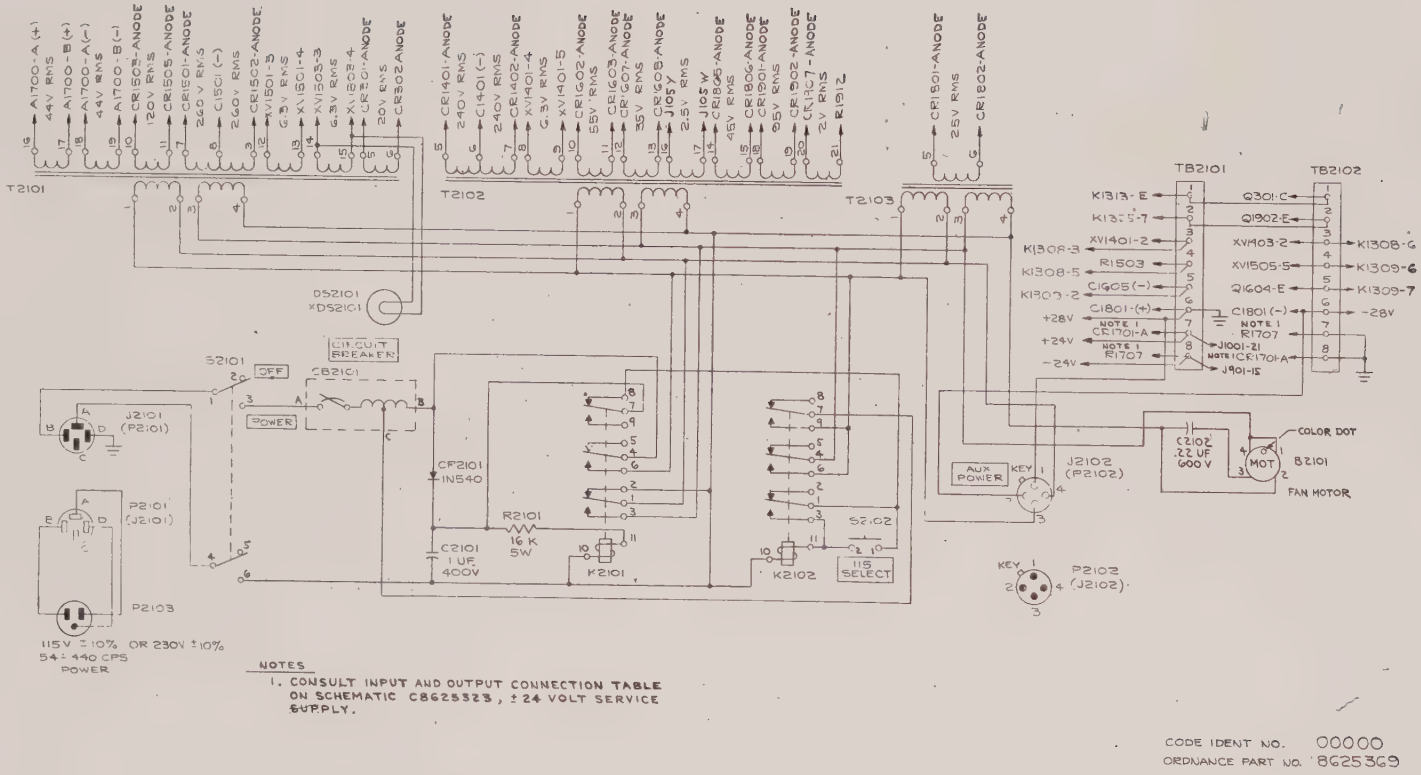

NOTES

1. CONSULT INPUT AND OUTPUT CONNECTION TABLE ON SCHEMATIC C8625323, ±24 VOLT SERVICE SUPPLY.

CODE IDENT NO. 00000
ORDNANCE PART NO. 8625369

Electrical Schematic Power Supply Transformer Circuit A2100

Dwg. 8625369

M8625349

31 January 1963

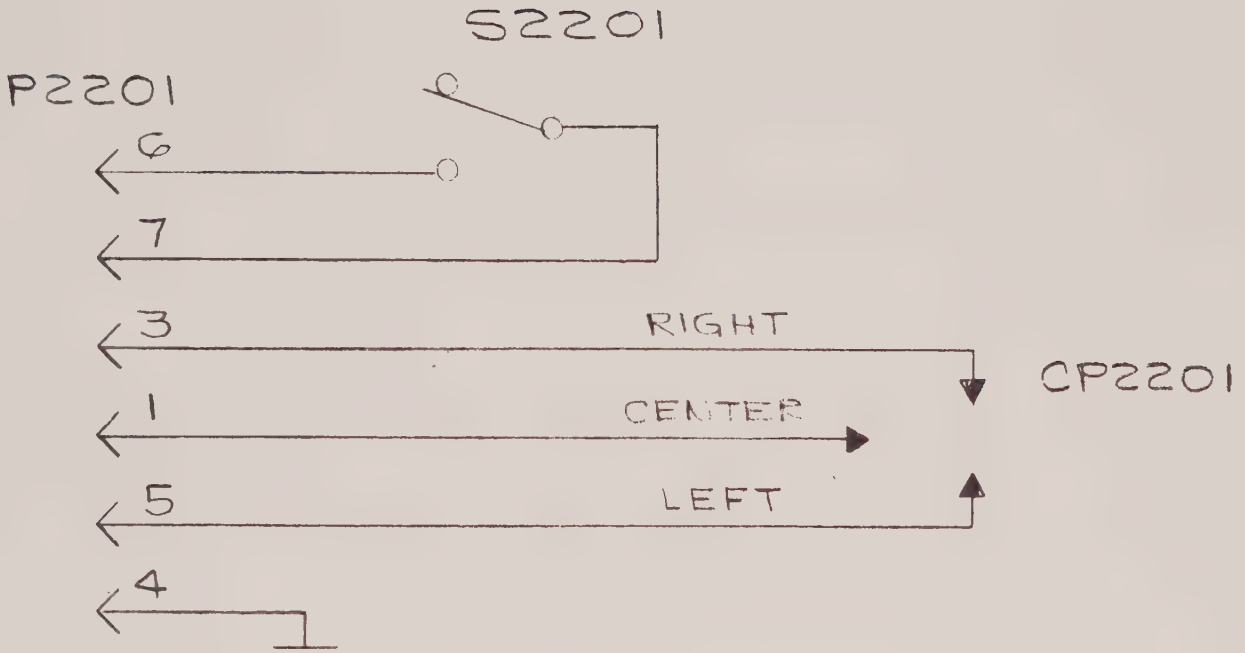

CODE IDENT NO. 00000

ORDNANCE PART NO 8625514

Dwg. 8625514

Electrical Schematic Prove In-Circuit A2200

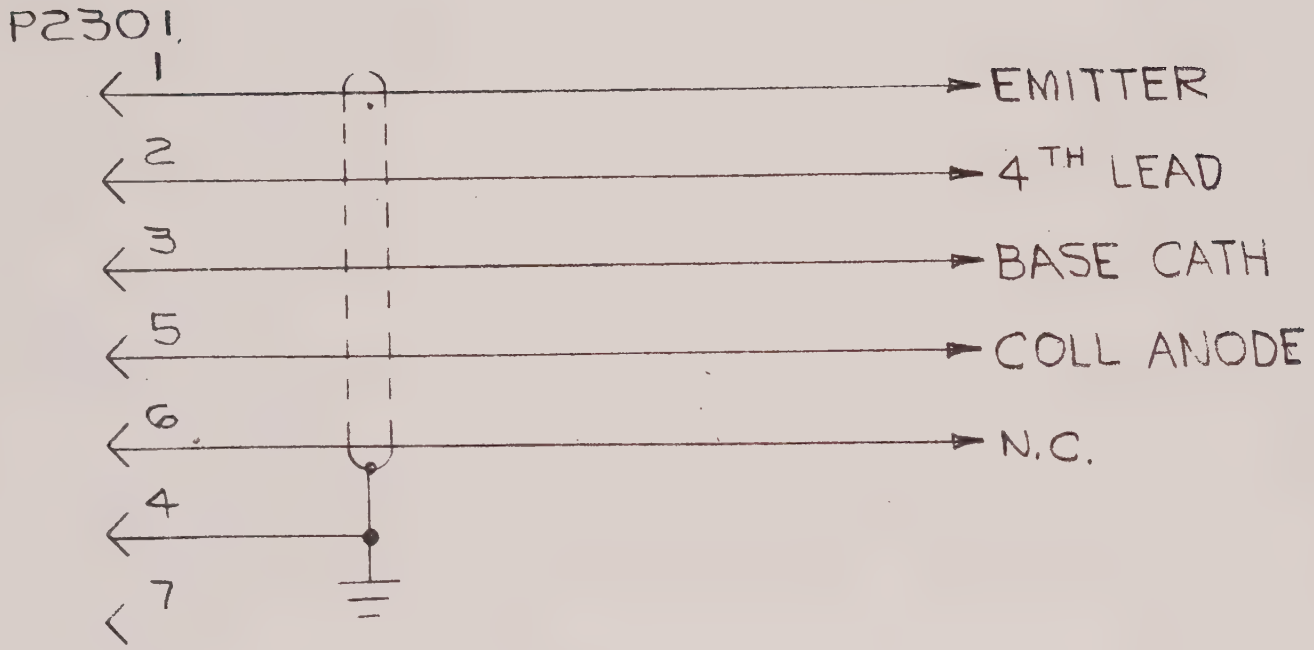

CODE IDENT NO. 00000

ORDNANCE PART NO. 8625535

Electrical Schematic Remote, Adaptor A2300

Dwg. 8625535

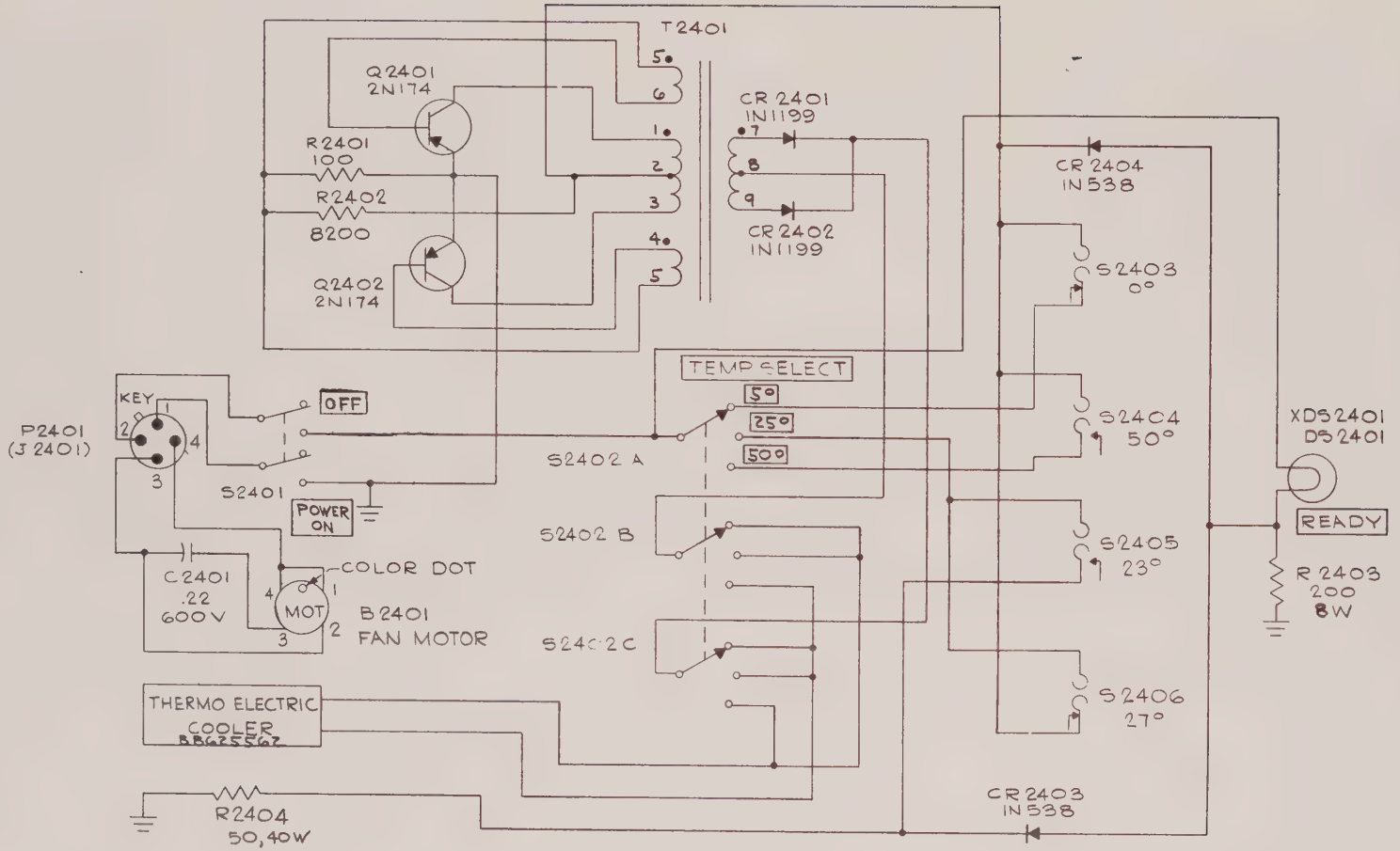

NOTES

1 - K = 1,000 MEG = 1,000,000 F = FARAD H = HENRY
M = MILLI S = SECOND U = MICRO W = WATT

2 - UNLESS OTHERWISE INDICATED:
ALL RESISTANCE VALUES ARE IN OHMS, ½W, 5%.
ALL CAPACITANCE VALUES ARE IN MF.

3 - CROSS REFERENCE DWG
*C 8625532.

CODE IDENT NO. 00000
ORDNANCE PART NO. 8625600

M8625349

31 January 1963

Electrical Diagram Thermo Electric
Transistor Test Module A2400

Dwg. 8625600

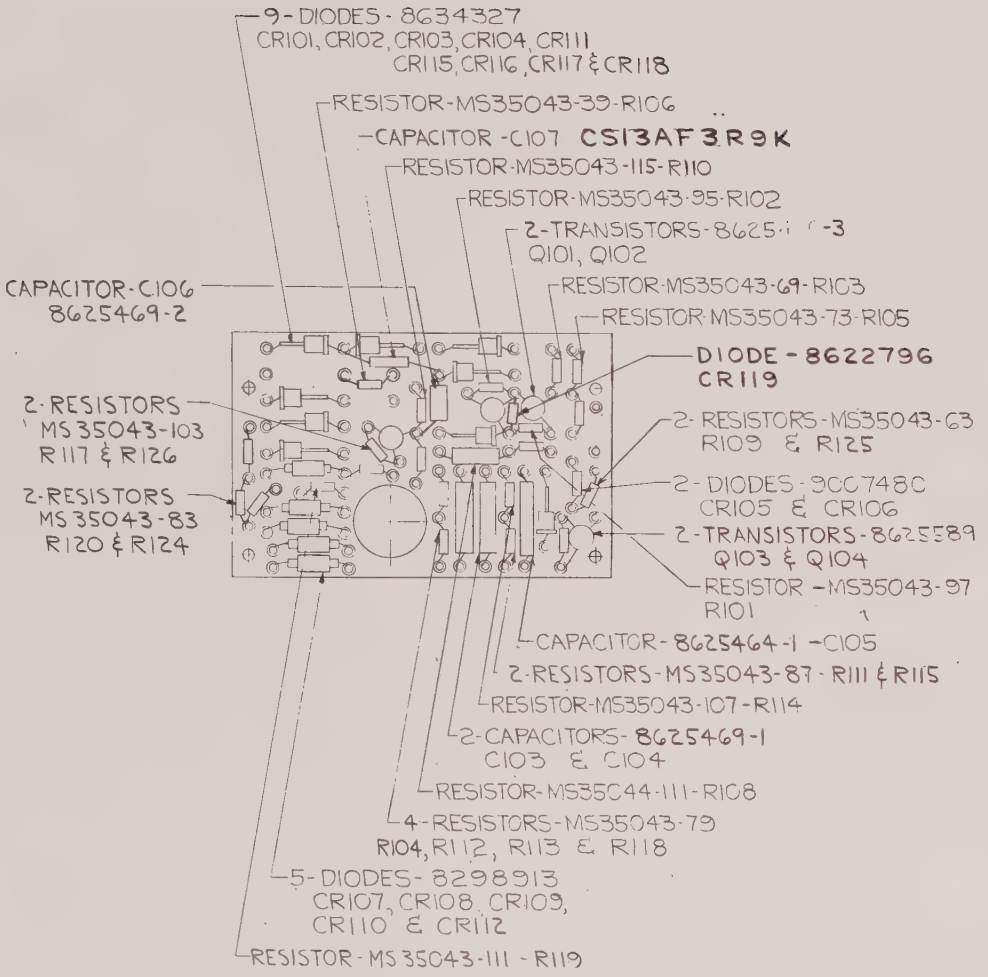

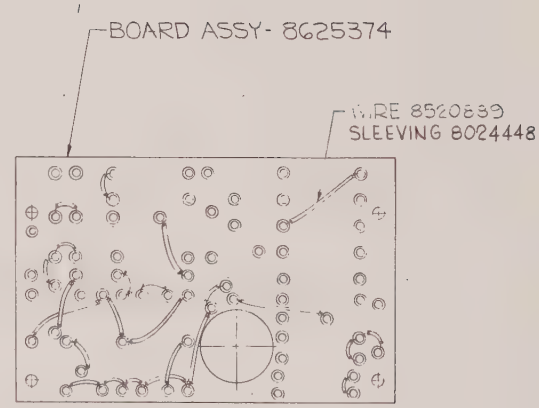

NOTES:
1. FOR ELECTRICAL SCHEMATIC REF SEE DWG F8625378.
ANT TREATMENT
TERMINALS PER MIL-S-6872

CODE IDENT NO. 00000
ORDNANCE PART NO. 8625388

FOR LIST OF PARTS SEE
ENGINEERING PARTS LIST 8625388

Component Board Assembly, TB101

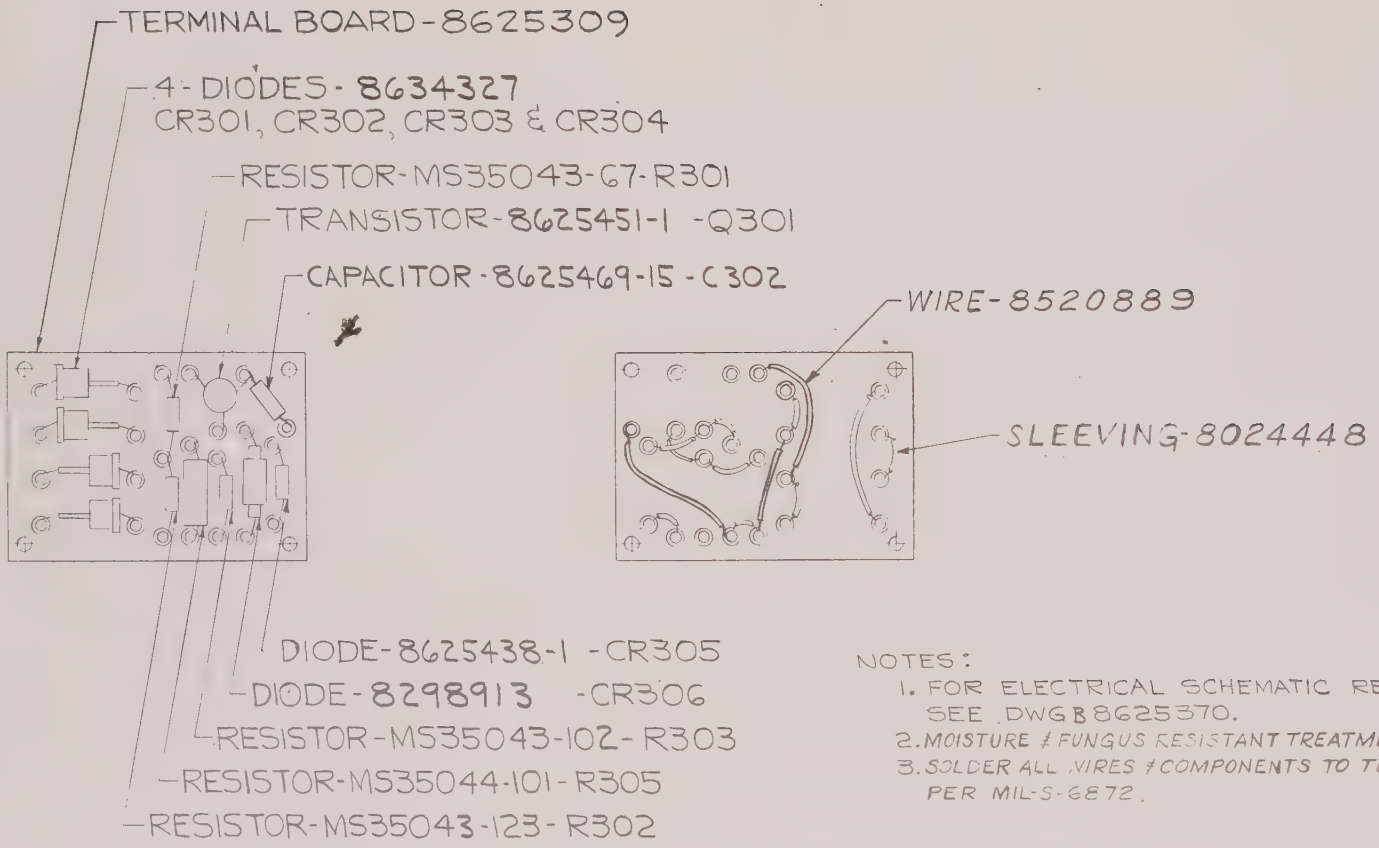

NOTES:

1. FOR ELECTRICAL SCHEMATIC REF SEE DWG B8625370.
2. MOISTURE & FUNGUS RESISTANT TREATMENT PER MIL-T-152.
3. SOLDER ALL WIRES & COMPONENTS TO TERMINALS PER MIL-S-6872.

M8625349

31 January 1963

FOR LIST OF PARTS SEE ENGINEERING PARTS LIST 8625382

CODE IDENT NO. 00000
ORDNANCE PART NO. 8625382

Component Board Assembly TB301

Dwg. 8625382

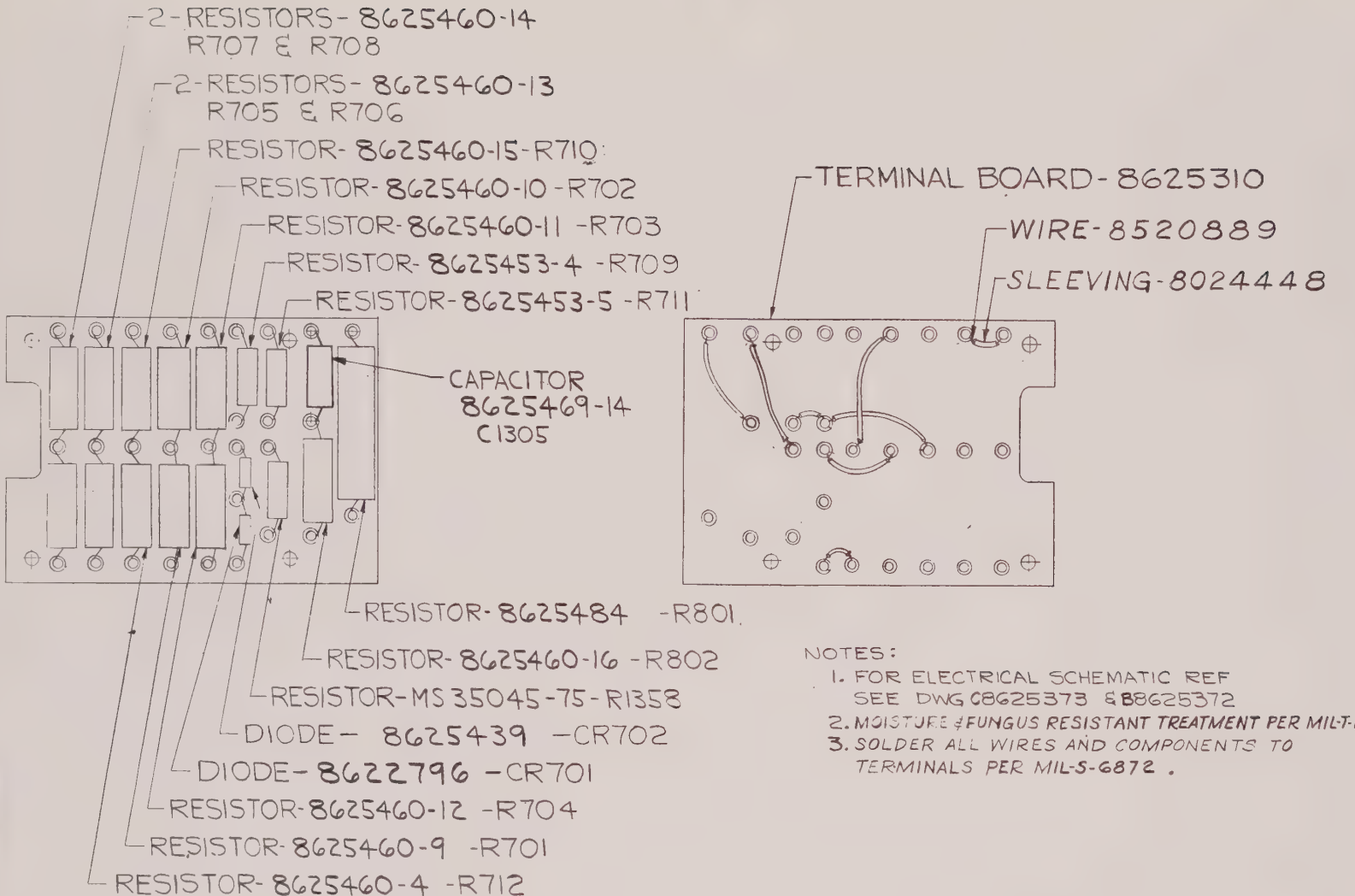

FOR LIST OF PARTS SEE
ENGINEERING PARTS LIST 8625379

NOTES:
1. FOR ELECTRICAL SCHEMATIC REF SEE DWG C8625373 & B8625372
2. MOISTURE & FUNGUS RESISTANT TREATMENT PER MIL-T-152.
3. SOLDER ALL WIRES AND COMPONENTS TO TERMINALS PER MIL-S-6872 .

CODE IDENT NO. 00000
ORDNANCE PART NO. 8625379

M8625379

31 January 1963

Component Board Assembly TB701

Dwg. 8625379

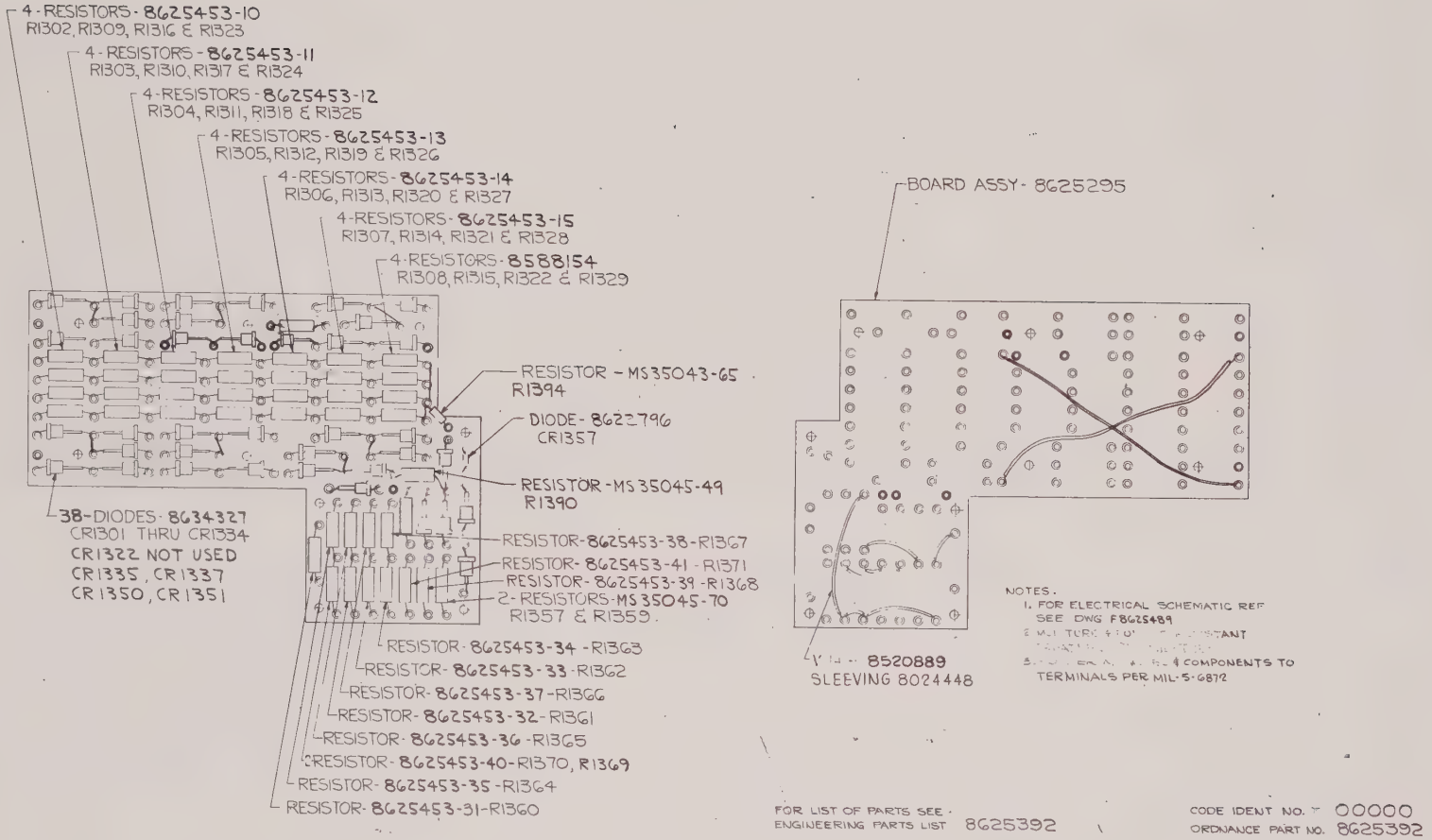

FOR LIST OF PARTS SEE ENGINEERING PARTS LIST 8625392

CODE IDENT NO. 00000
ORDNANCE PART NO. 8625392

M8625349

31 January 1963

Component Board Assembly TB1301

Dwg. 8625392

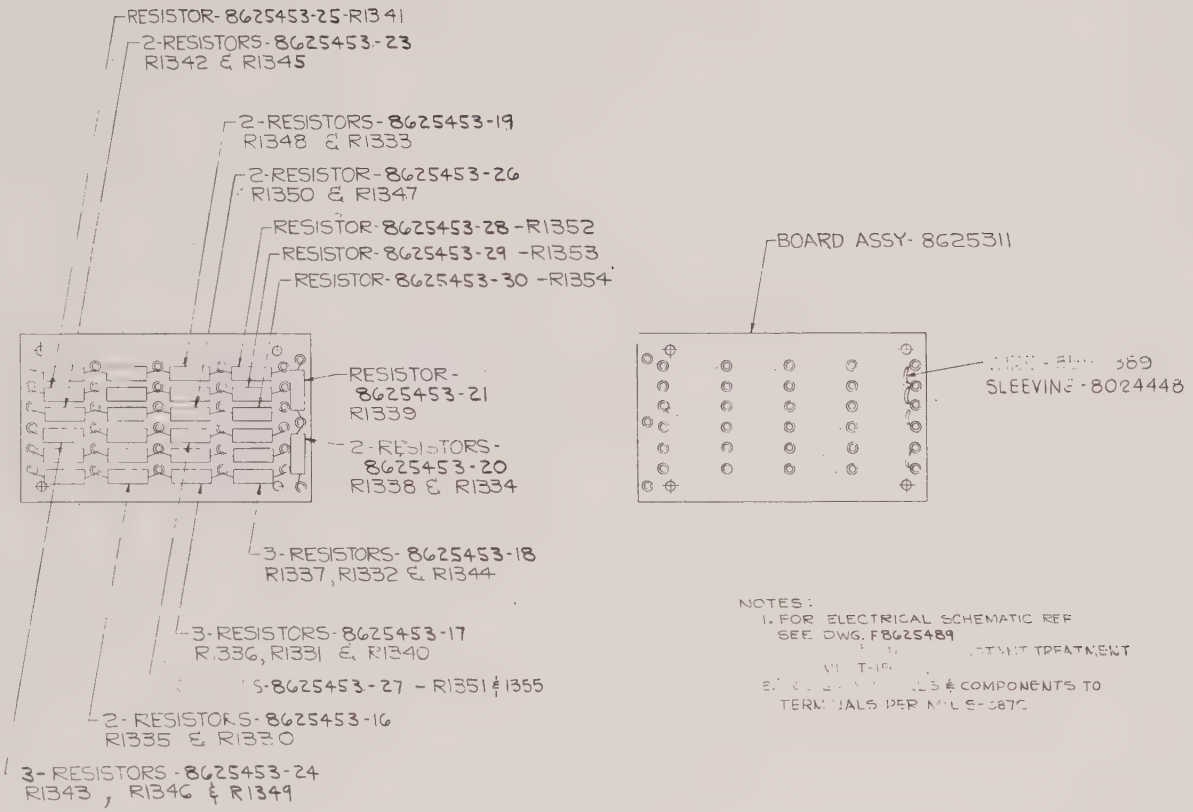

NOTES:
1. FOR ELECTRICAL SCHEMATIC REF SEE DWG. F8625489
2. [illegible] COMPONENTS TO TERMINALS PER MIL S-5870

FOR LIST OF PARTS SEE ENGINEERING PARTS LIST 8625383

CODE IDENT NO. 00000
ORDNANCE PART NO. 8625383

M8625349

31 January 1963

Component Board Assembly TB1302

Dwg. 8625383

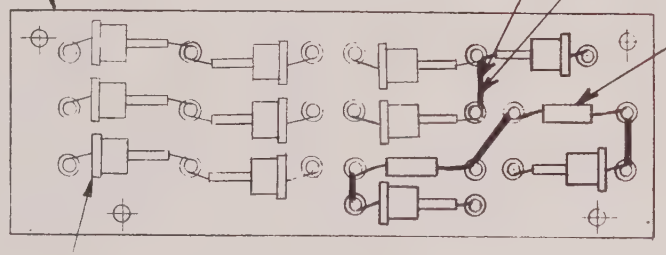

NOTES:
1. FOR ELECTRICAL SCHEMATIC REF SEE DWG F8625489.
2. MOISTURE AND FUNGUS RESISTANCE TREATMENT PER MIL-T-152
3. SOLDER ALL WIRES AND COMPONENTS TO TERMINALS PER MIL-S-6872

FOR LIST OF PARTS SEE ENGINEERING PARTS LIST 8625498

CODE IDENT NO. 00000
ORDNANCE PART NO. 8625498

Dwg. 8625498

Component Board Assembly TB1303

M8625349

31 January 1963

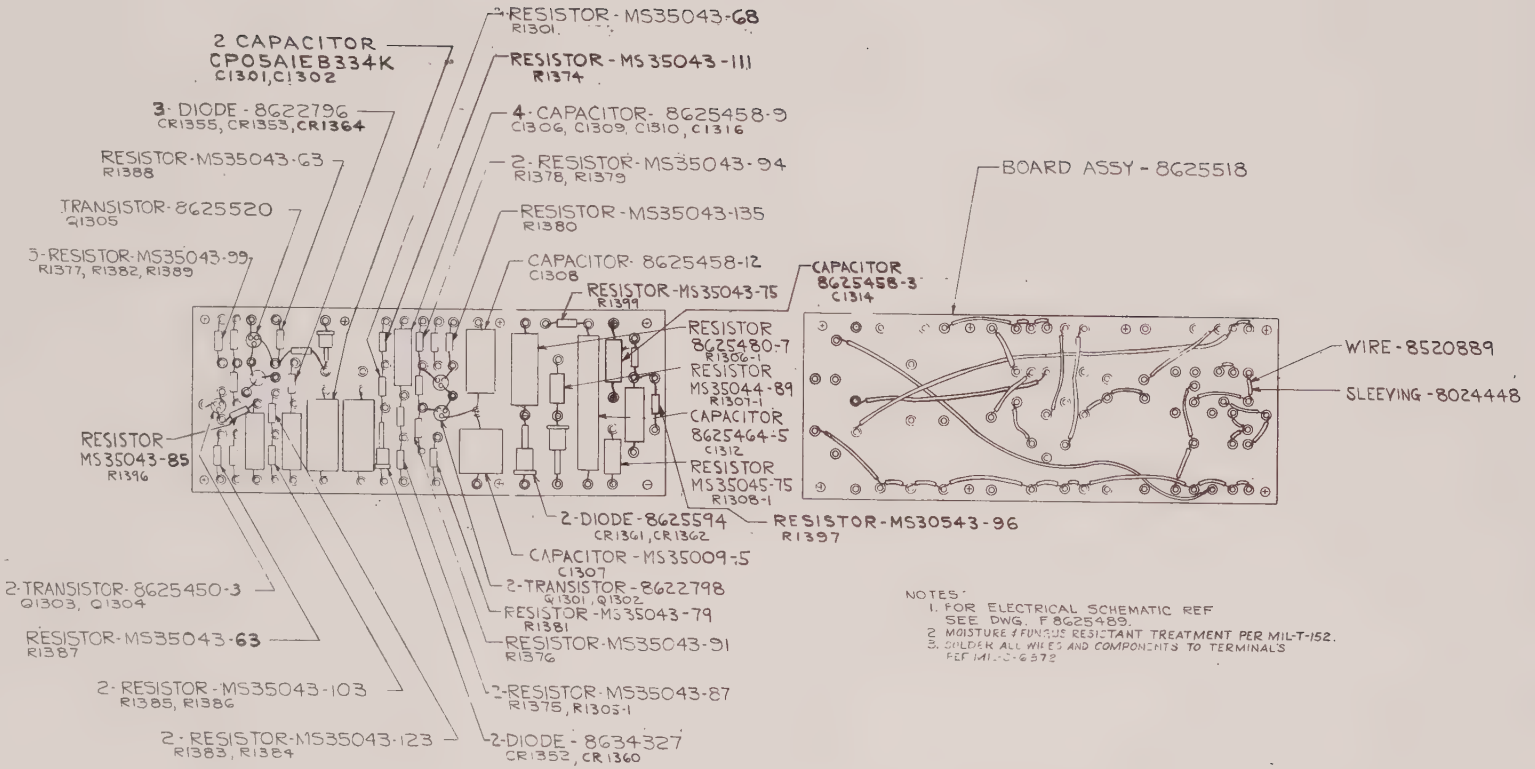

NOTES:
1. FOR ELECTRICAL SCHEMATIC REF SEE DWG. F 8625489.
2. MOISTURE & FUNGUS RESISTANT TREATMENT PER MIL-T-152.
3. SOLDER ALL WIRES AND COMPONENTS TO TERMINALS PER MIL-P-6872

FOR LIST OF PARTS SEE ENGINEERING PARTS LIST 8625519

CODE IDENT NO. 00000
ORDNANCE PART NO. 8625519

Dwg. 8625519

Component Board Assy. TB1304

M8625349

31 January 1963

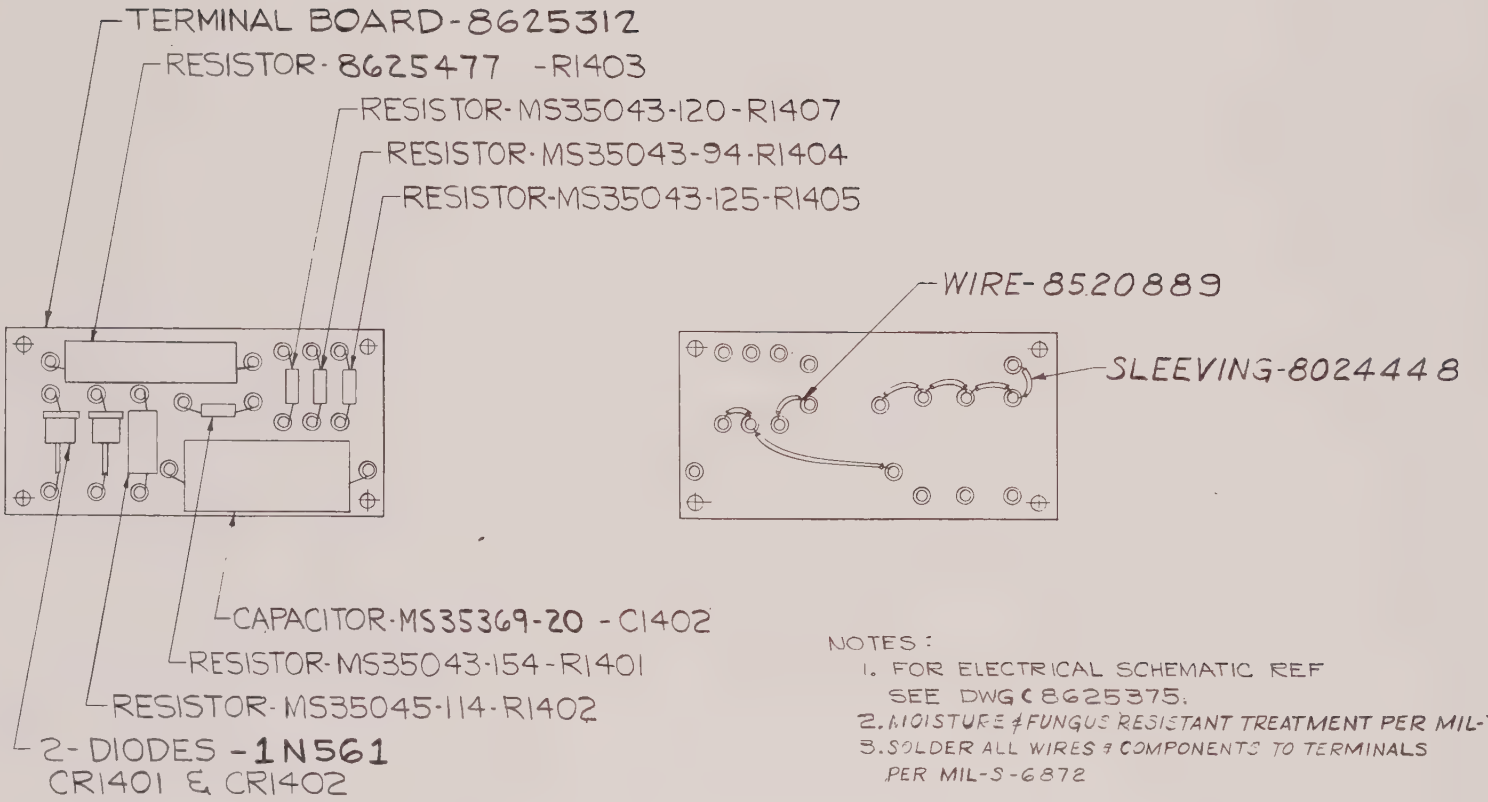

NOTES:
1. FOR ELECTRICAL SCHEMATIC REF SEE DWG 8625375.
2. MOISTURE & FUNGUS RESISTANT TREATMENT PER MIL-T-152.
3. SOLDER ALL WIRES & COMPONENTS TO TERMINALS PER MIL-S-6872

FOR LIST OF PARTS SEE ENGINEERING PARTS LIST 8625381

CODE IDENT NO. 00000
ORDNANCE PART NO. 8625381

Component Board Assembly TB1401

Dwg. 8625381

M8625349

31 January 1963

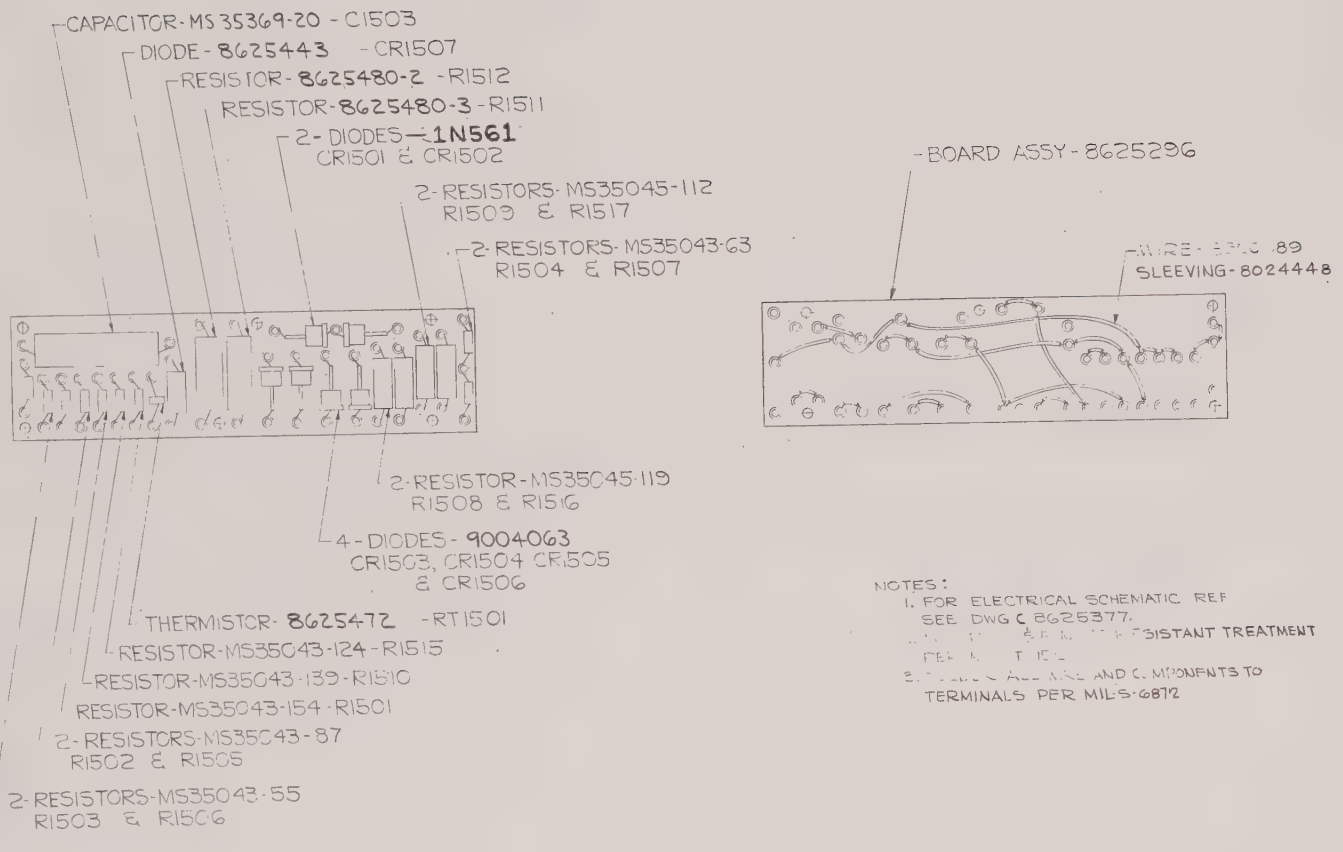

NOTES:
1. FOR ELECTRICAL SCHEMATIC REF SEE DWG C 8625377.
[illegible] RESISTANT TREATMENT
[illegible]
2. [illegible] AND C. MPONENTS TO TERMINALS PER MIL-S-6872

FOR LIST OF PARTS SEE ENGINEERING PARTS LIST 8625386

CODE IDENT NO 00000
ORDNANCE PART NO 8625386

31 January 1963

M8625349

Component Board Assembly TB1501

Dwg. 8625386

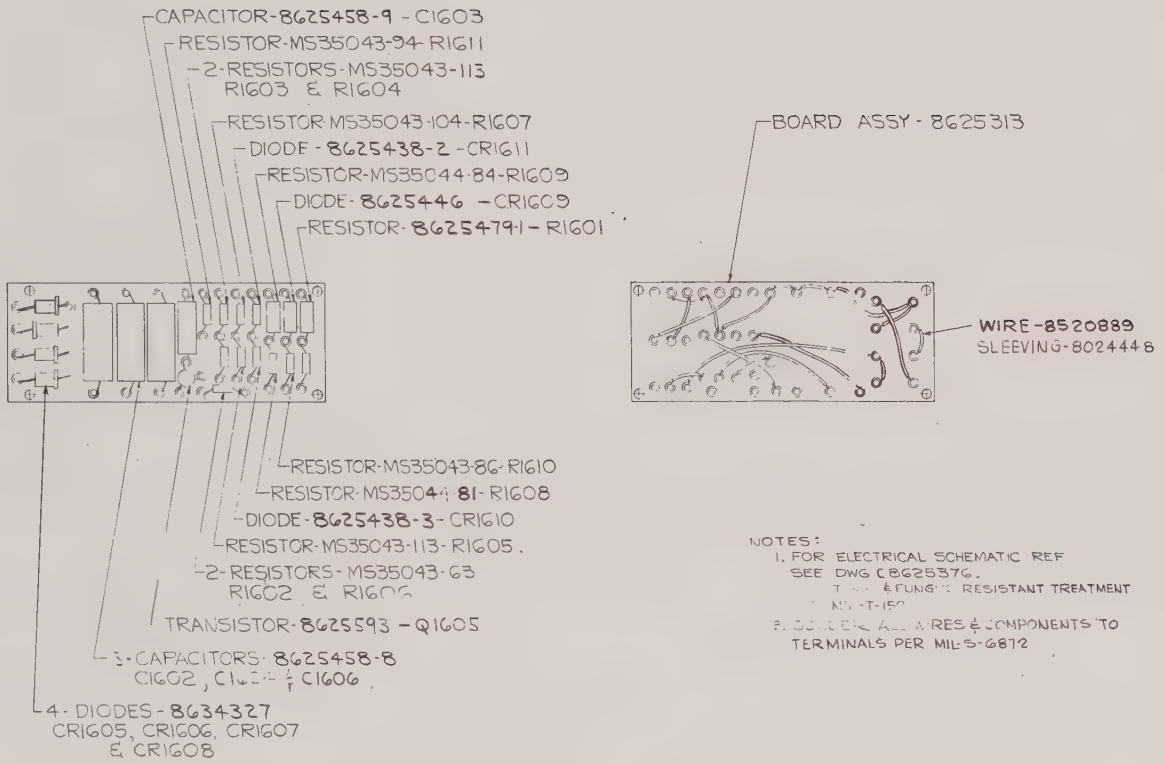

NOTES:
1. FOR ELECTRICAL SCHEMATIC REF SEE DWG C8625376.
   T[illegible] & FUNG[illegible] RESISTANT TREATMENT
   MIL-T-150
2. SOLDER ALL WIRES & COMPONENTS TO TERMINALS PER MIL-S-6872

FOR LIST OF PARTS SEE
ENGINEERING PARTS LIST 8625385

CODE IDENT NO. 00000
ORDNANCE PART NO 8625385

M8625349

31 January 1963

Component Board Assembly TB1601

Dwg. 8625385

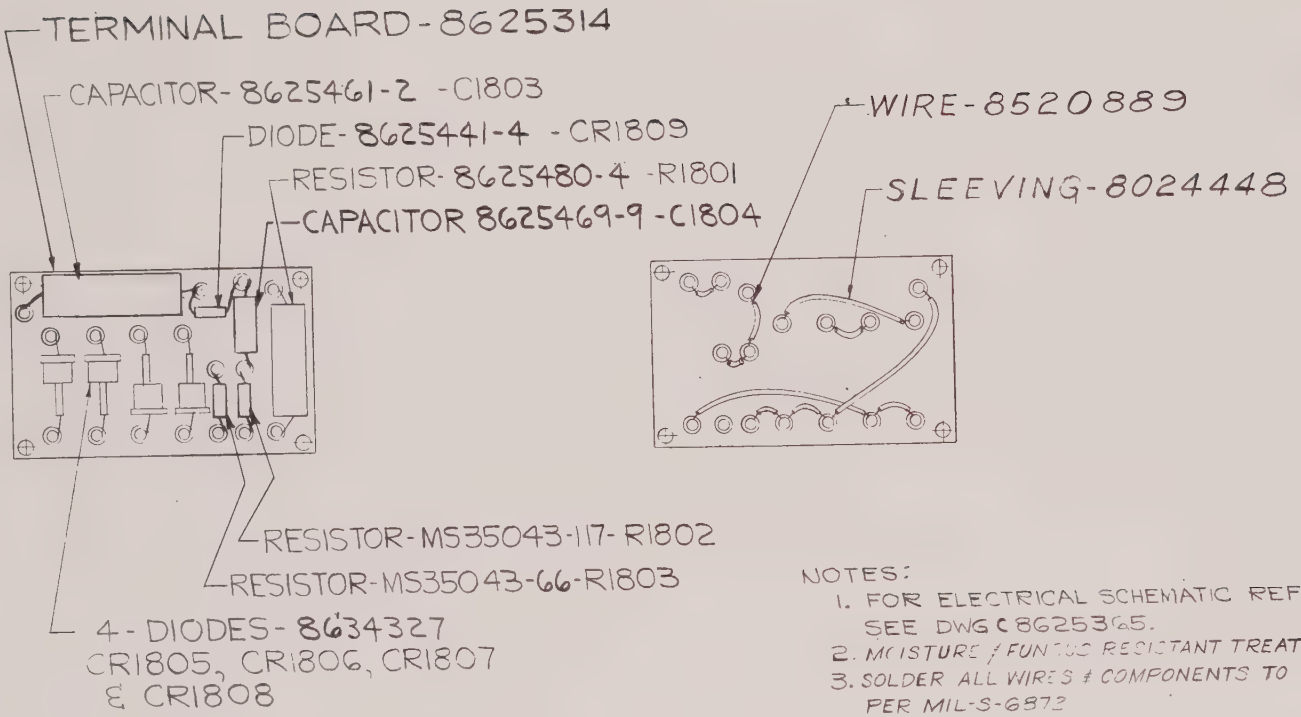

NOTES:
1. FOR ELECTRICAL SCHEMATIC REF SEE DWG C8625365.
2. MOISTURE & FUNGUS RESISTANT TREATMENT PER MIL-T-152.
3. SOLDER ALL WIRES & COMPONENTS TO TERMINALS PER MIL-S-6872

M8625349

31 January 1963

FOR LIST OF PARTS SEE ENGINEERING PARTS LIST 8625380

CODE IDENT NO. 00000
ORDNANCE PART NO. 8625380

Component Board Assembly TB1801

Dwg. 8625380

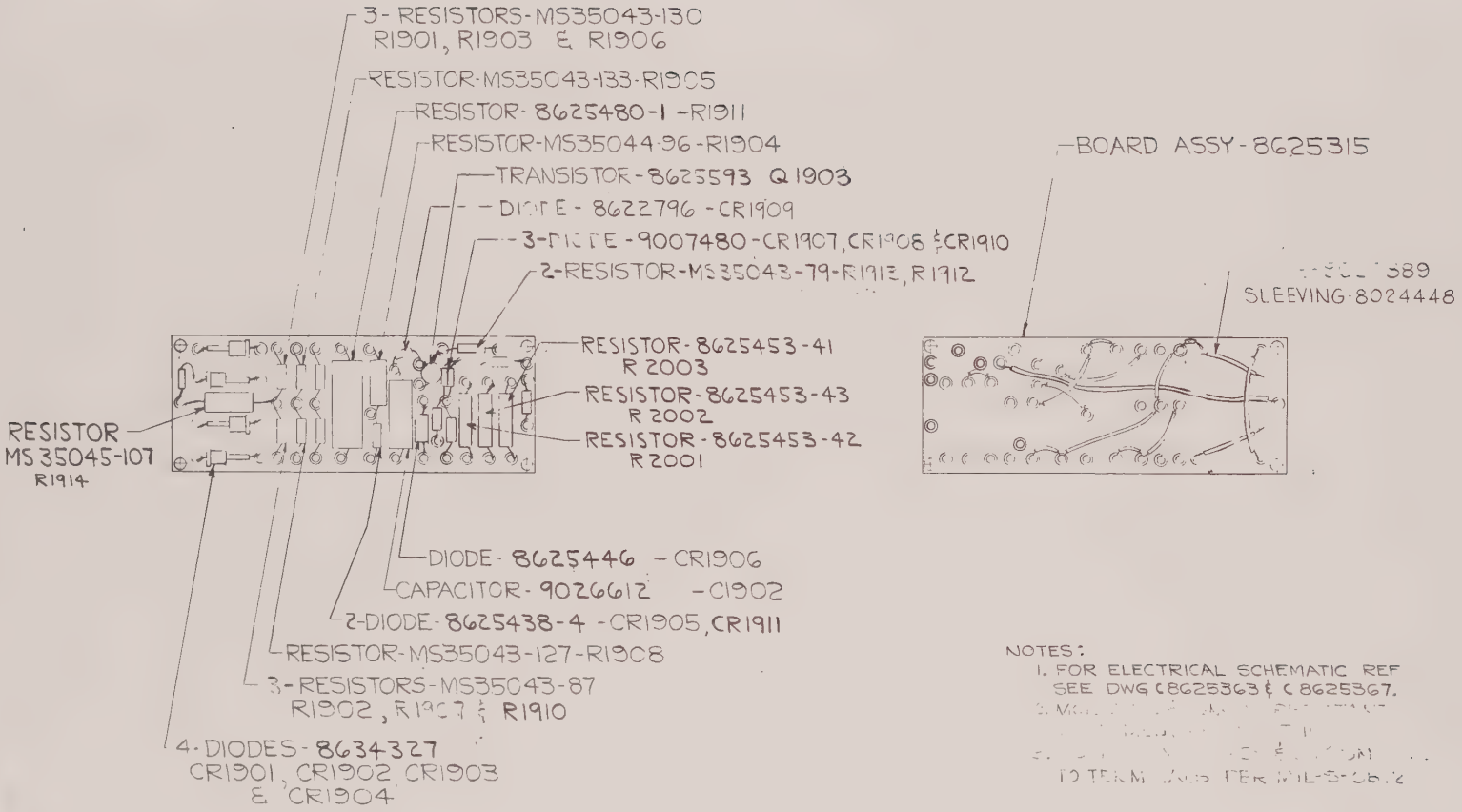

NOTES:
1. FOR ELECTRICAL SCHEMATIC REF SEE DWG C8625363 & C8625367.

CODE IDENT NO. 00000
ORDNANCE PART NO. 8625384

FOR LIST OF PARTS SEE
ENGINEERING PARTS LIST 8625384

Component Board Assembly, TB1901

M8625349

31 January 1963

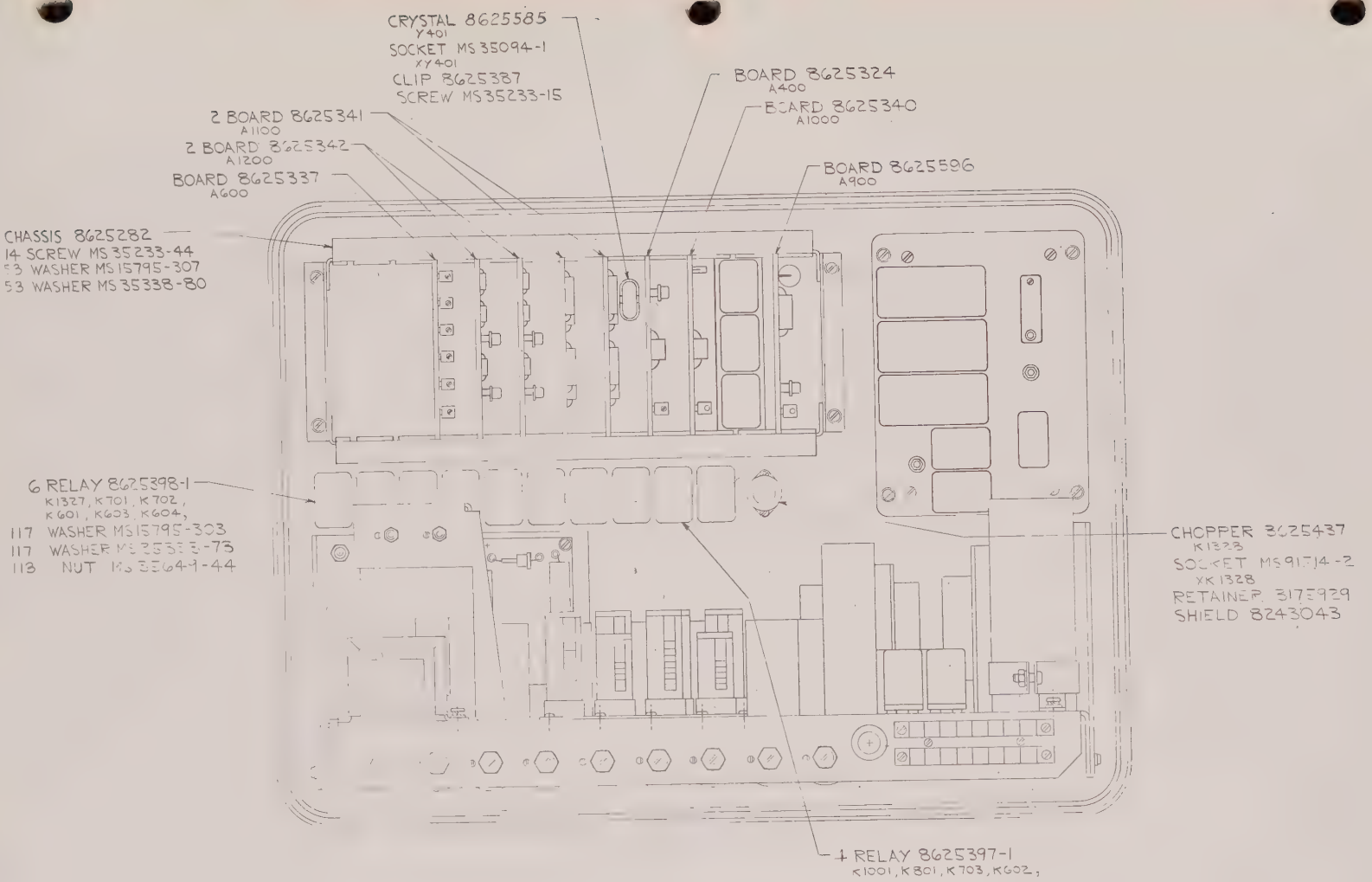

FOR LIST OF PARTS SEE ENGINEERING PARTS LIST 8625347

CODE IDENT NO. 00000
ORDNANCE PART NO. 8625347

M8625349

31 January 1963

Assembly Test Set, Transistor TV-14()/U

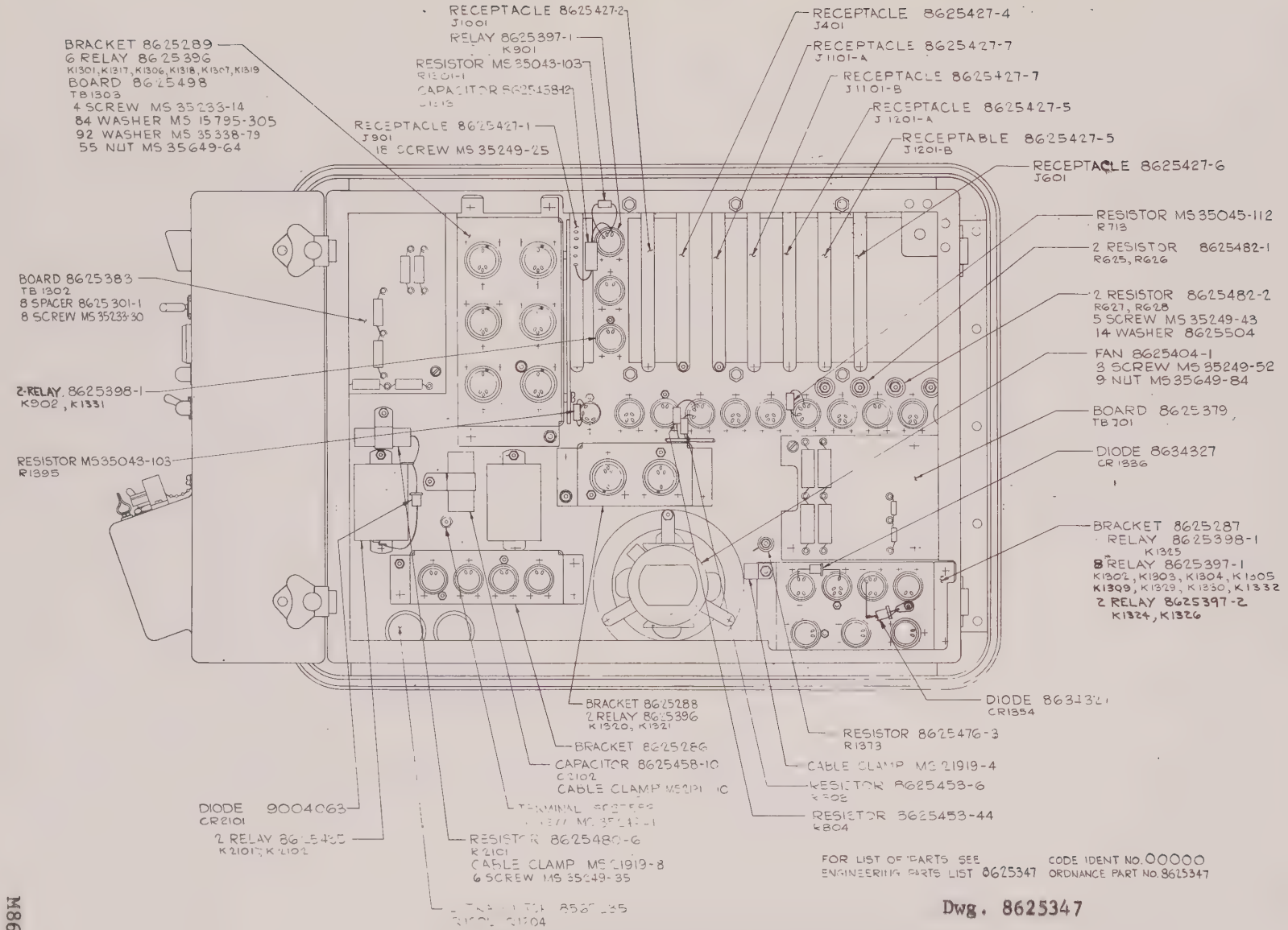

FOR LIST OF PARTS SEE ENGINEERING PARTS LIST 8625347

CODE IDENT NO. 00000
ORDNANCE PART NO. 8625347

Dwg. 8625347

Assembly, Test Set, Transistor TV-14( )/U

M8625349

31 January 1963

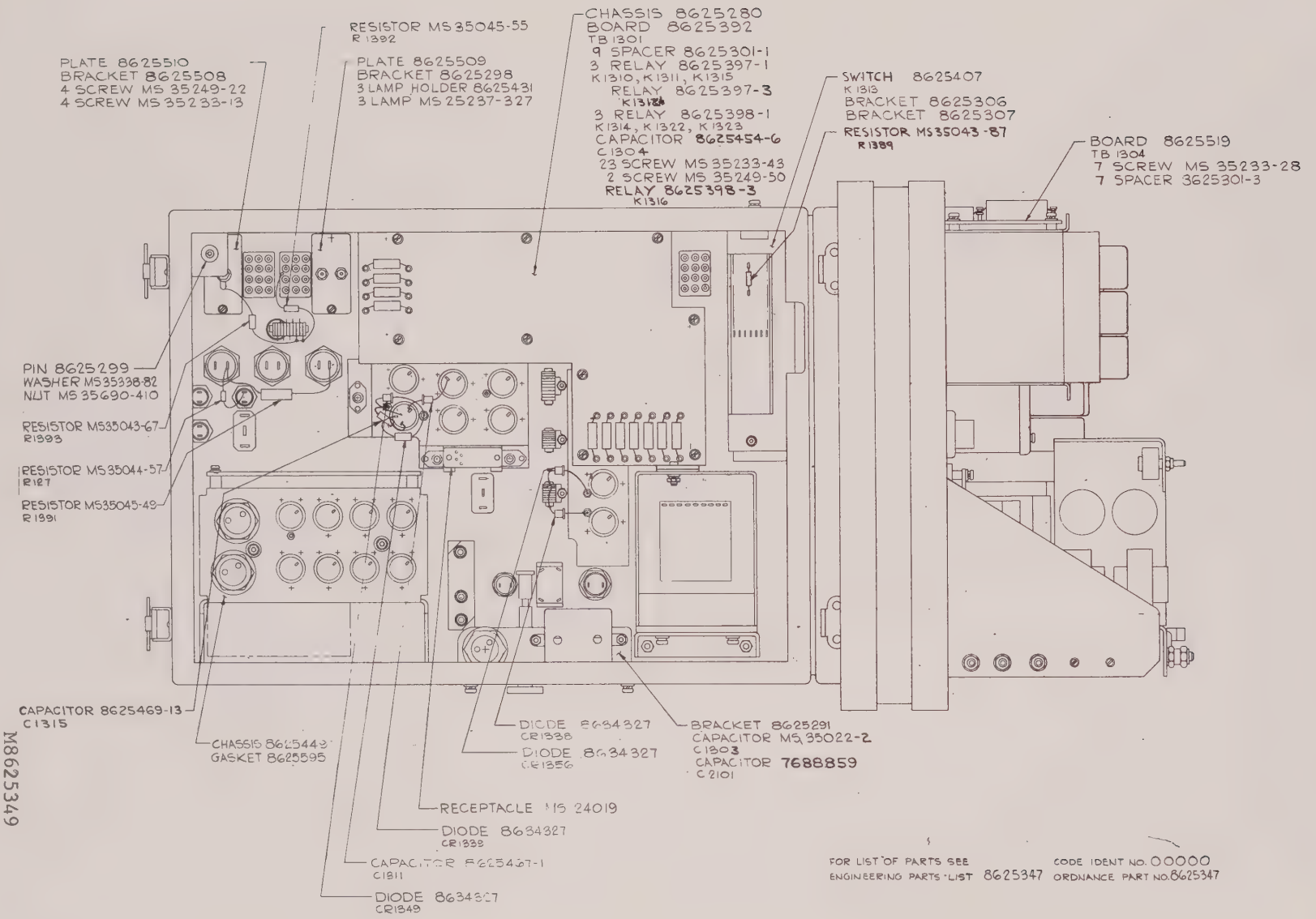

M8625349

31 January 1963

Assembly, Test Set Transistor TV-14()/U

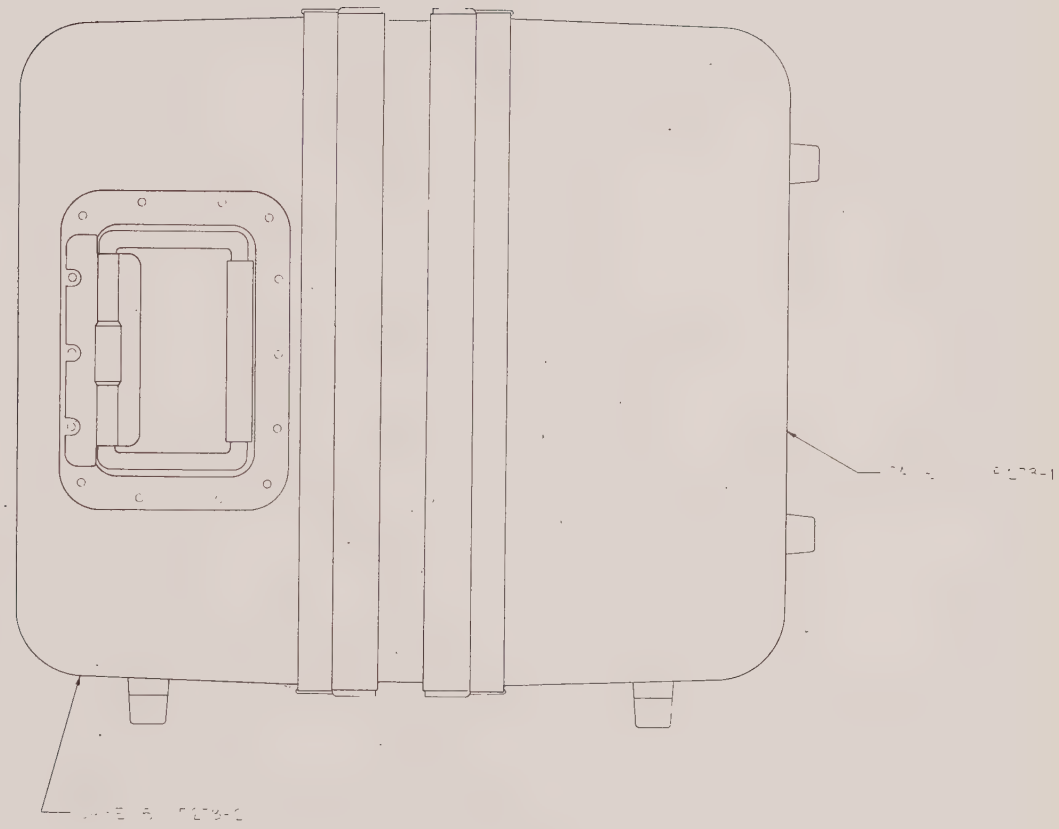

Assembly Test Set, Transistor TV-14()/U

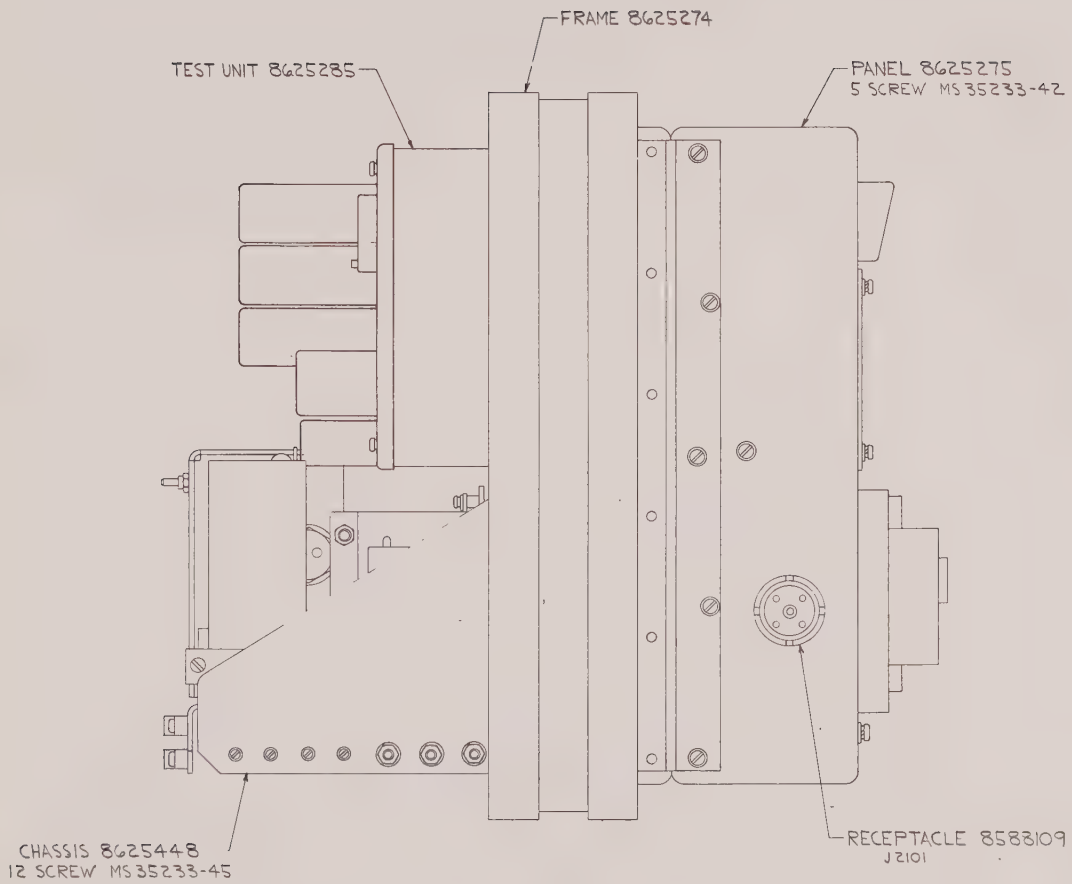

FOR LIST OF PARTS SEE ENGINEERING PARTS LIST 8625347

CODE IDENT NO. 00000
ORDNANCE PART NO. 8625347

Dwg. 8625347

Assembly Test Set, Transistor TV-14( )/U

NOMENCLATURE	ASSY DWG NO.	SCHEM DWG NO.	CIRCUIT SERIES NO.
ASSEMBLY ELECTRICAL EQUIPMENT AUTOMATIC LEAD SELECTOR A100	D8625388 F8625449	F8625378	100 - 199
REGULATED 1MA CURRENT SUPPLY A300 ASSEMBLY ELECTRICAL EQUIPMENT POWER SUPPLY	C8625382 F8625448	B8625370	300 - 399
READOUT CONVERTER (PART OF DIGITAL VM) A400	F8625324	D8625316	400 - 499
CONSTANT SIGNAL CURRENT SOURCE hfe MEASUREMENT A500	F8625325 F8625326 D8625285	D8625317	500 - 599
hFE TEST CIRCUIT 1.25 MA TO 1AMP PULSE FOR BASE DRIVE A600 ASSEMBLY TEST SET, TRANSISTOR	F8625337 F8625347	D8625318	600 - 699
LARGE SIGNAL BETA (hFE TEST CIRCUIT DC) A700	C8625379	C8625373	700 - 799
CURRENT FOR APPLIED VOLTAGE TEST CKT A800	C8625379	B8625372	800 - 899
PRECISION SCALING AMPLIFIER A900	F8625596 F8625347	D8625591	900 - 999
COMPARISON CONVERTER A1000	F8625340	D8625320	1000 - 1099
READOUT COUNTER A1100	F8625341	D8625321	1100 - 1199
LIGHT DRIVER A1200	F8625342	D8625322	1200 - 1299
PROGRAM CONTROL A1300	D8625392 D8625383 B8625498 D8625519 F8625347	F8625488 SH-1 F8625488 SH-2 F8625489 SH-3	1300 - 1399
FIXED HIGH VOLTAGE POWER SUPPLY +225V A1400 ASSEMBLY ELECTRICAL EQUIPMENT POWER SUPPLY	C8625381 F8625448	C8625375	1400 - 1499
PROGRAMMED HIGH VOLTAGE POWER SUPPLY A1500 ASSEMBLY ELECTRICAL EQUIPMENT POWER SUPPLY	D8625386 F8625448	C8625377	1500 - 1599
0-50V PROG LOW VOLTAGE POWER SUPPLY A1600 ASSEMBLY ELECTRICAL EQUIPMENT POWER SUPPLY	D8625385 F8625448	C8625376	1600 - 1699
+24 VOLT SERVICE SUPPLY A1700 ASSEMBLY ELECTRICAL EQUIPMENT POWER SUPPLY	C8625343 F8625448	C8625323	1700 - 1799
SUPPLEMENTARY POWER SUPPLY A1800 ASSEMBLY ELECTRICAL EQUIPMENT POWER SUPPLY	C8625380 F8625448	C8625365	1800 - 1899
REGULATED CURRENT SUPPLY A1900 ASSEMBLY ELECTRICAL EQUIPMENT POWER SUPPLY	D8625384 F8625448	C8625363	1900 - 1999
ZENER DIODE TEST CIRCUIT A2000 ASSEMBLY ELECTRICAL EQUIPMENT POWER SUPPLY	D8625384 F8625448	C8625367	2000 - 2099
POWER SUPPLY TRANSFORMER CIRCUIT A2100	F8625448	D8625369	2100 - 2199
PROBE IN-CIRCUIT A2200	D8625490	B8625514	2200 - 2299
REMOTE ADAPTER A2300	C8625521	B8625535	2300 - 2399
THERMAL ELECTRIC TRANSISTOR, TEST MODULE A2400	F8625556 B8625004	C8625600	2400 - 2499

M8625349

31 January 1963

Dwg. 8625532

Cross Reference, for Assembly & Schematic Drawings to Circuit Series Nos.

CODE IDENT NO. 00000
ORDNANCE PART NO. 8625532

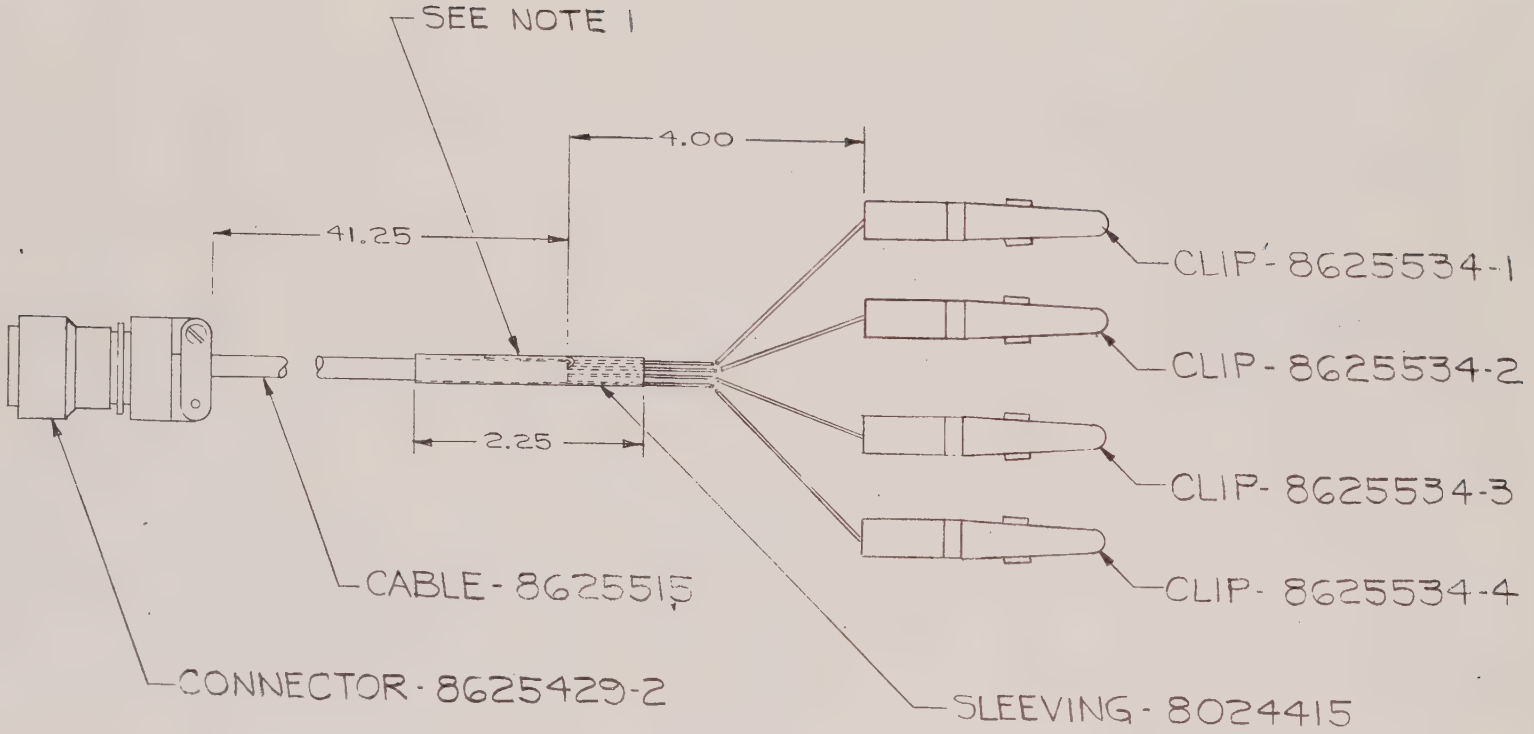

NOTES:

1. 5TH CONDUCTOR TO BE SOLDERED TO CONNECTOR PIN G, AND BROUGHT THRU CABLE AND BENT BACK UNDER SLEEVING.
2. FOR SCHEMATIC SEE B8625535.

CODE IDENT NO. 00000
ORDNANCE PART NO. 8625521

Assembly Remote Adaptor

Dwg. 8625521

M8625349

31 January 1963

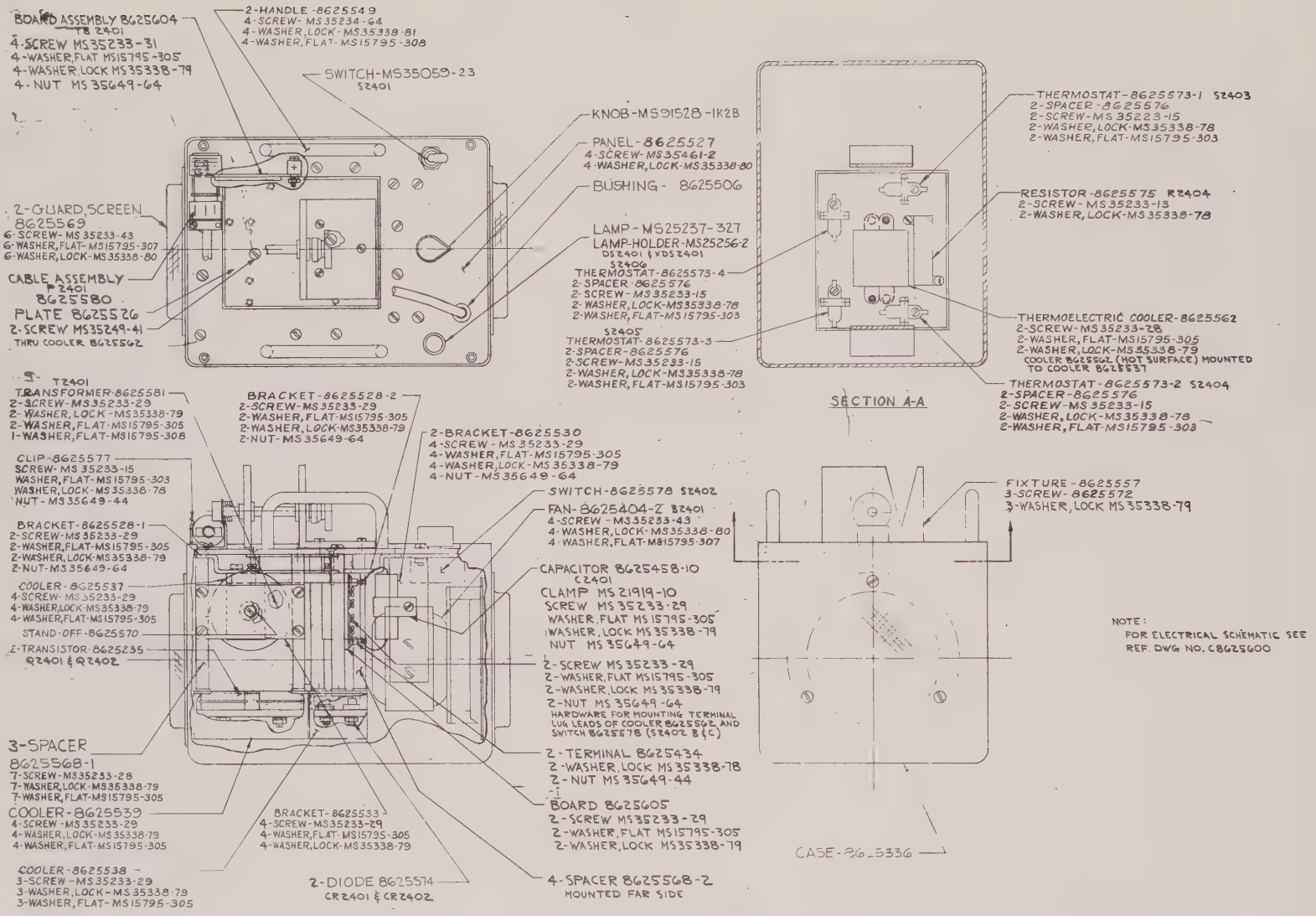

FOR LIST OF PARTS SEE ENG MFG'ING PARTS LIST 8625556 Dwg. 8625556

CODE IDENT NO. 00000
ORDNANCE PART NO. 8625556

Assembly Thermal Electric Transistor Test Module

31 January 1963

NAVORD 3349

31 January 1963

APPENDIX IV

TEST CIRCUIT SCHEMATICS

FOR

AN/USM-136

M8625349

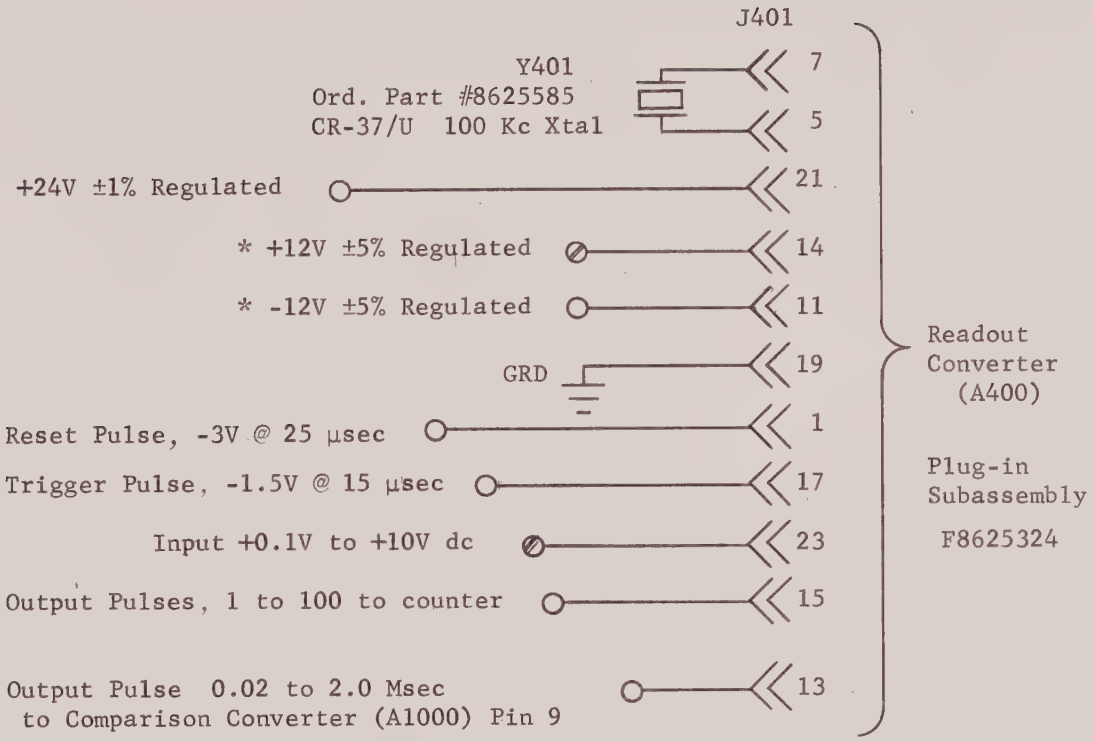

*Note: -12V must be at least 0.1 volt greater value than the +12V value -- examples; -12V and +11.9V; or -12.6V and +12.5V, or -11.6V and +11.4V.

READOUT CONVERTER TEST CIRCUIT

APPENDIX IV

Figure a

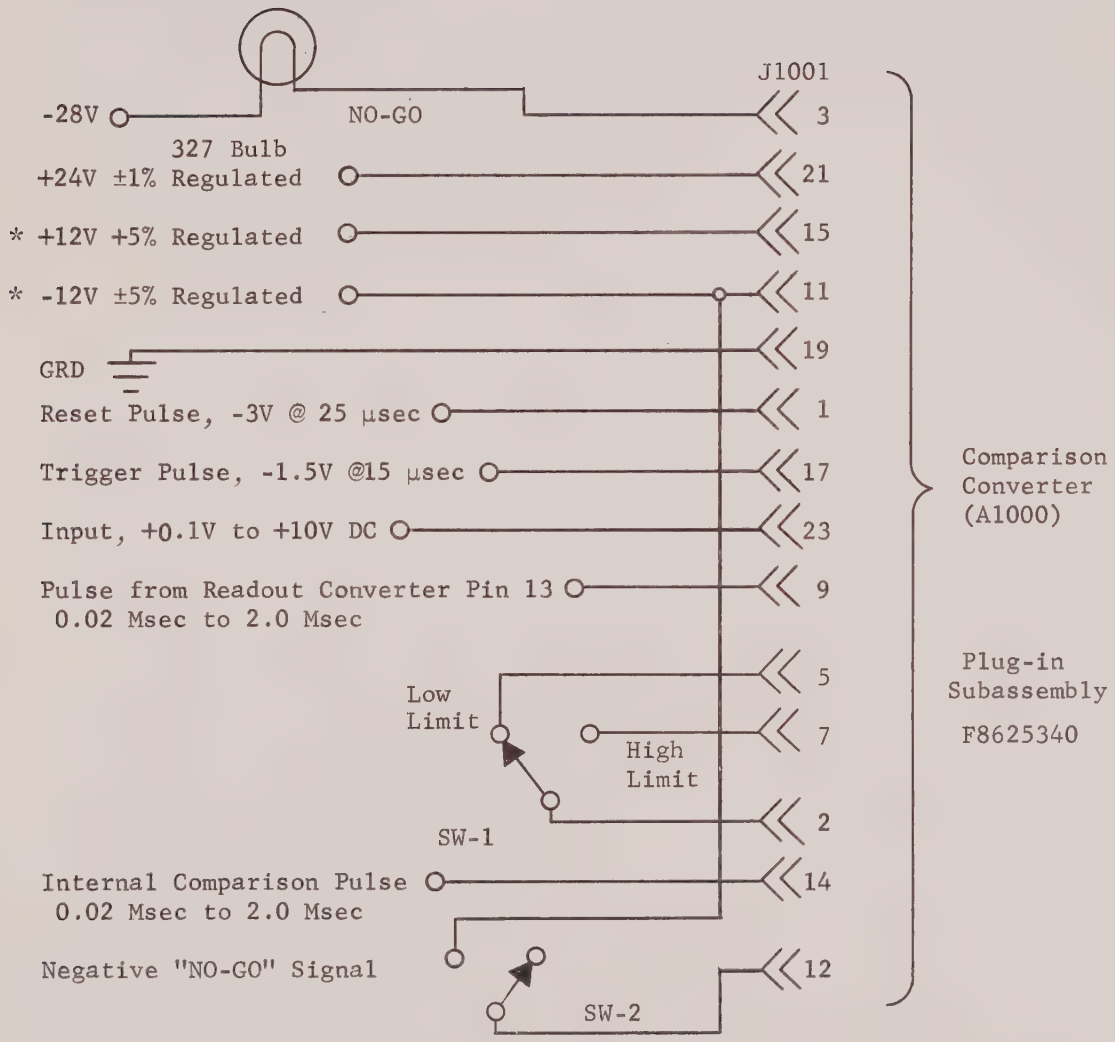

*Note: -12V must be at least 0.1 volt greater value than the +12V value -- examples; -12V and +11.9V; or -12.6V and +12.5V, or -11.6V and +11.4V.

COMPARISON CONVERTER TEST CIRCUIT

APPENDIX IV

Figure b

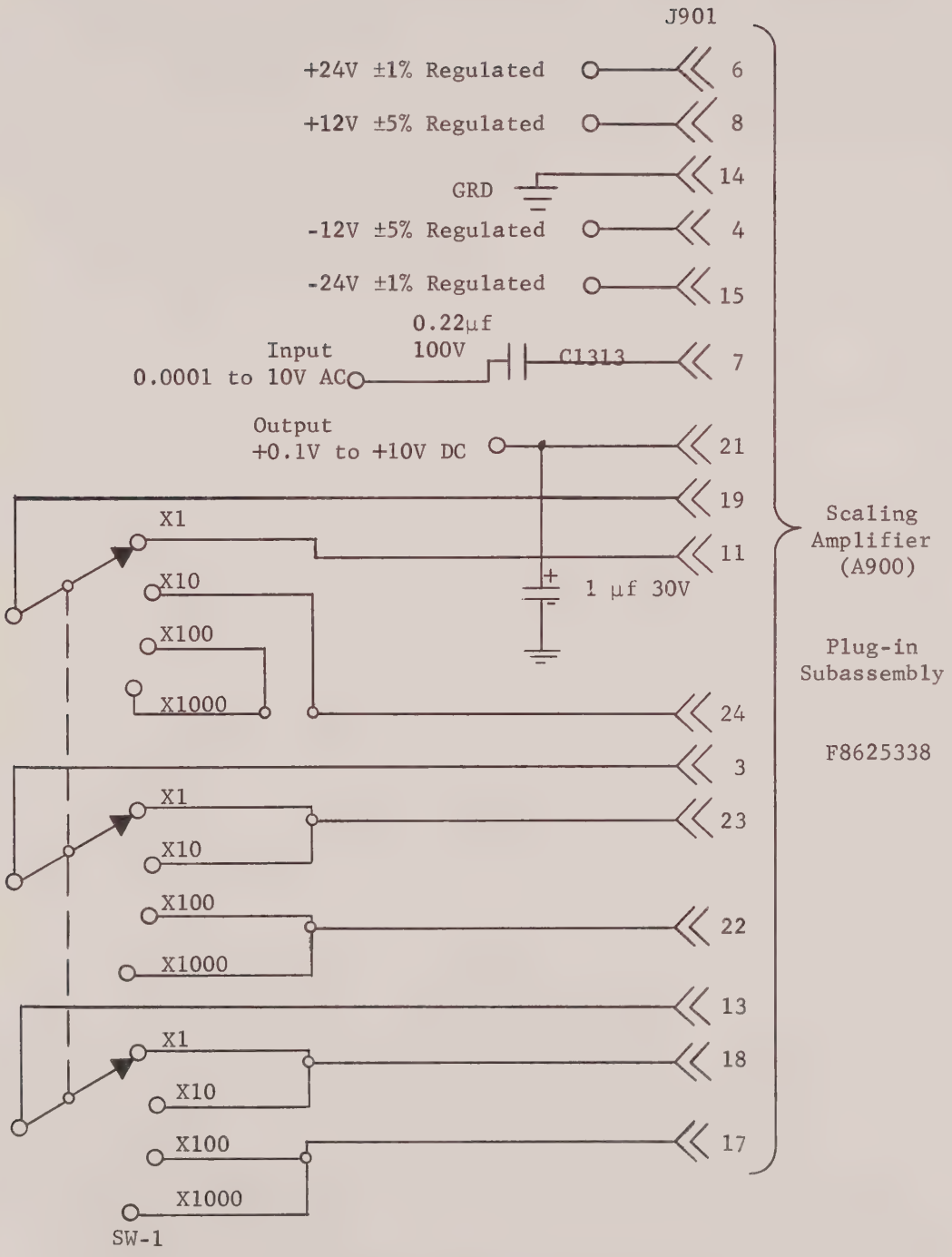

SCALING AMPLIFIER TEST CIRCUIT

APPENDIX IV

Figure c

M8625349

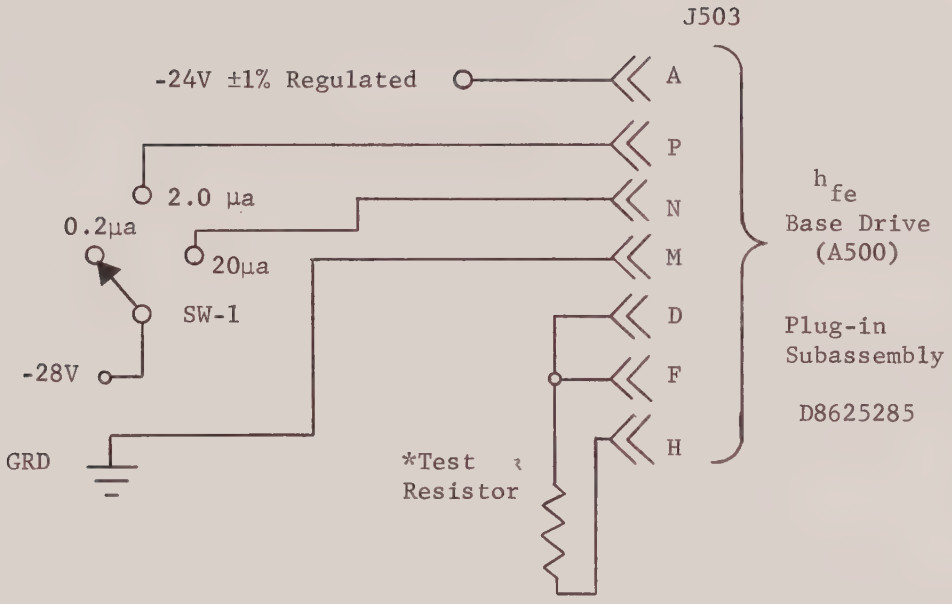

*Test Resistors are 100K, 10K, and 1K, all ±1%

h_{fe} BASE DRIVE TEST CIRCUIT

APPENDIX IV
Figure d

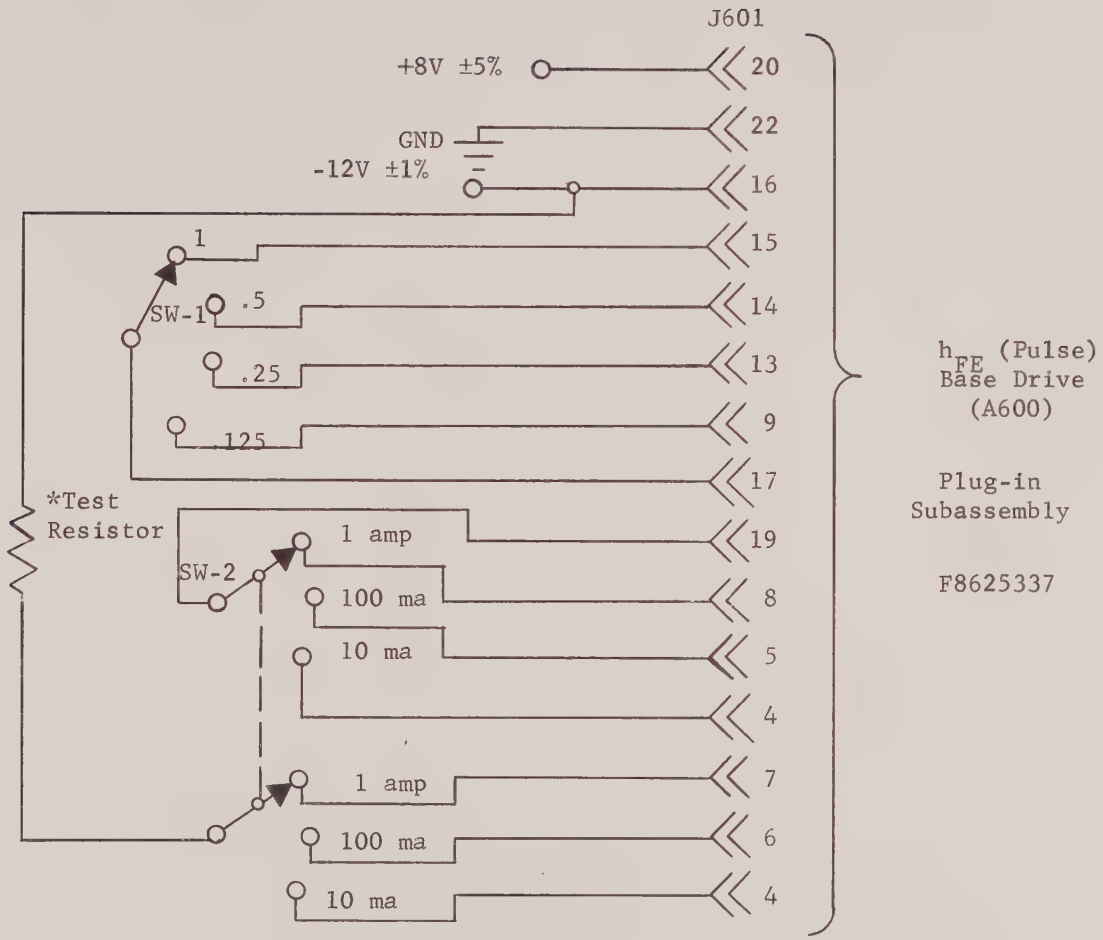

*Test Resistors will be 1 ohm ±1%, 10 ohm ±1%, or 100 ohm ±1%

h_{FE} (PULSE) BASE DRIVE TEST CIRCUIT

APPENDIX IV

Figure e

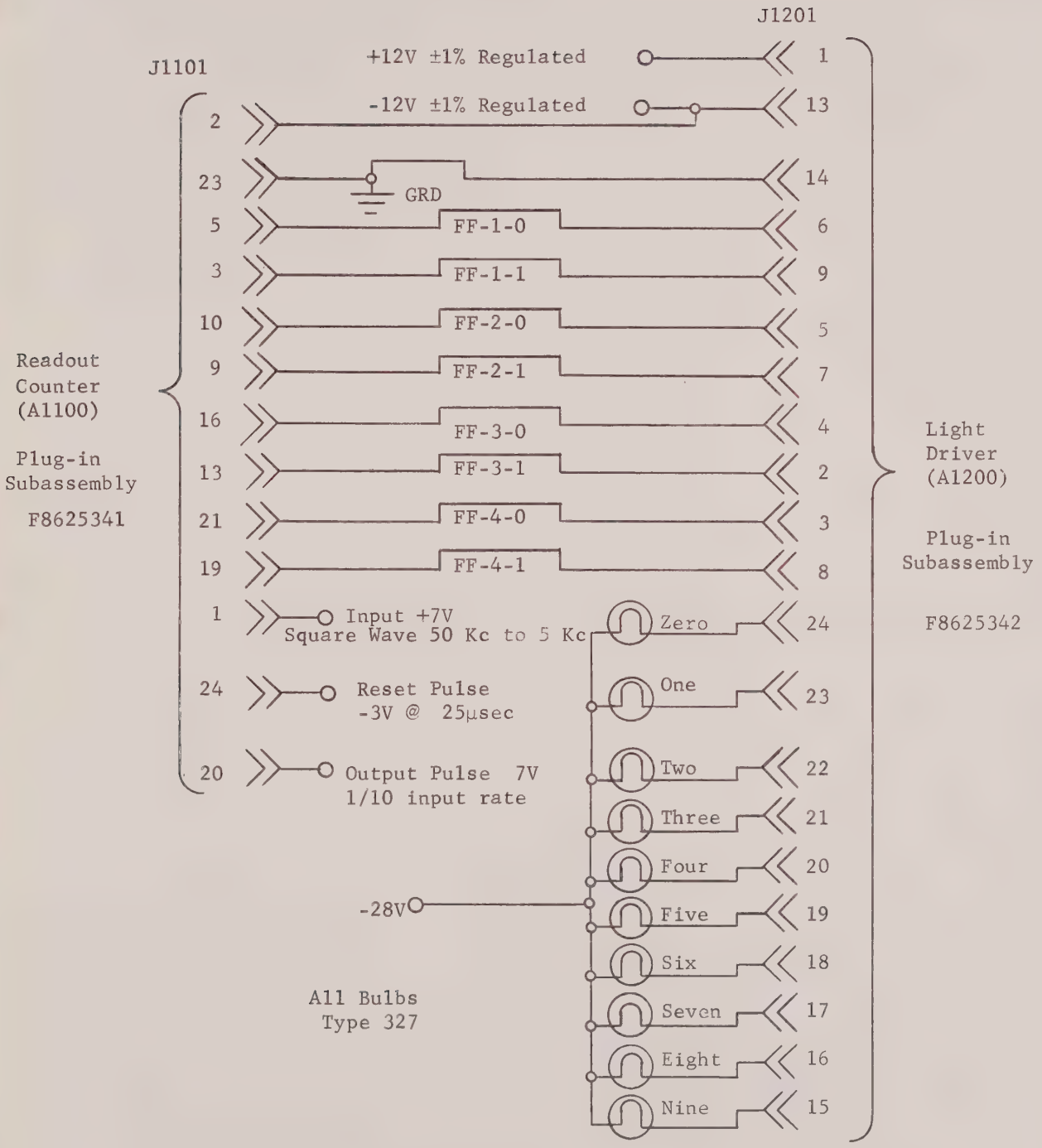

READOUT COUNTER & LIGHT DRIVER TEST CIRCUIT

APPENDIX IV

Figure f

M8625349

APPENDIX V

PROGRAMMING THE PUNCHED CARDS,
INSTRUCTIONS FOR,
ALSO, SAMPLE DATA SHEETS

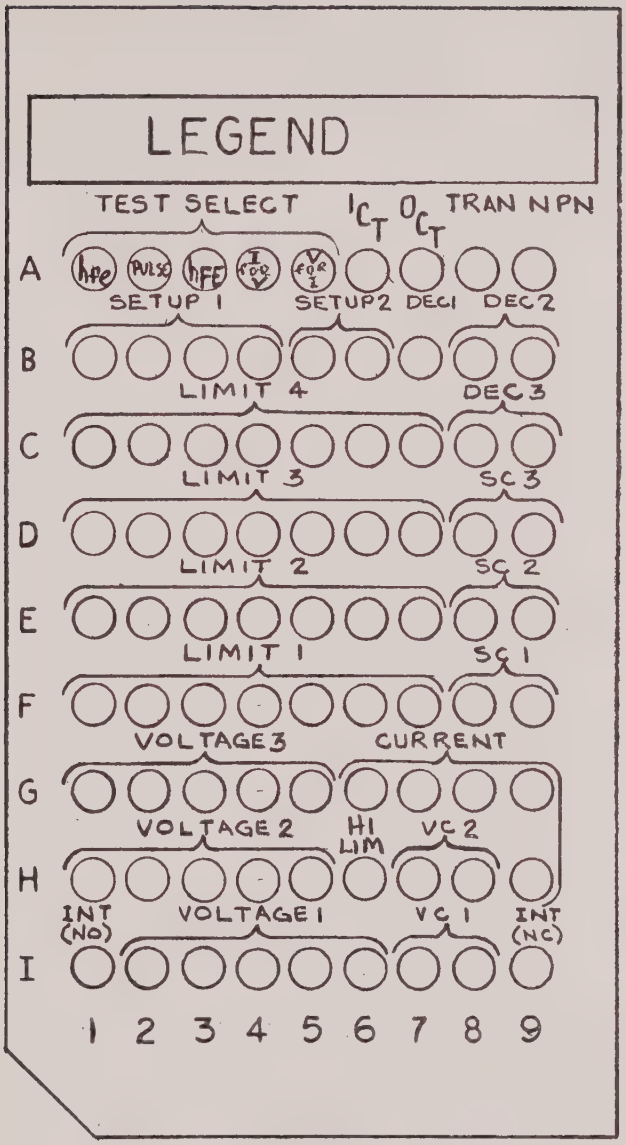

GLOSSARY

ICT - IN-CKT. TEST
TRAN. - TRANSISTOR VS. DIODE
DEC - DECIMAL POSITION
SC - SCALE FACTOR
VC - VOLTAGE CHOICE
INT - INTERLOCK
OCT - OUT OF CKT TEST
NPN — VS PNP
HI LIM - HIGH LIMIT

SK1101277

M8625349

I - SMALL SIGNAL β TEST - h_{fe} (A1)

A - SET UP #1

1 - CALCULATE APPROX BASE DRIVE

$$i_b = \frac{I_E}{10\beta \text{ MIN.}}$$

2 - CHOOSE NEAREST VALUE TO: .2μa, 2.0μa, 20μa

(IF MIDWAY BETWEEN VALUES CHOOSE LARGEST)

3 - PUNCH HOLES ACCORDING TO TABLE

BASE DRIVE μamp	PUNCH SET UP #1 No HOLES	NOTE :
0.2		IF $h_{fe} < 40$ PUNCH HOLE B-2
2.0	B-2	
20	B-1	

B - SCALE #1

TEST CKT. OUTPUT VOLTS, $e_o \approx (\beta_{MAX} \times \text{BASE DRIVE } \mu\text{amp} \times 0.005)$

IF $E_{o}/_{1}^{9.9}$ IS THE OUTPUT VOLTAGE MULTIPLIED TO BE GREATER THAN 1 BUT LESS THAN 9.9

THEN THE SCALE, $Sc = \frac{E_{o}/_{1}^{9.9}}{e_o}$

1 - CALCULATE Sc FROM ABOVE EQ. OR USE e_o IN TABLE

2 - PUNCH HOLES ACCORDING TO TABLE:

e_o	Sc	PUNCH SCALE #1
1 to 9.9	1	NO HOLES
0.1 to 0.99	10	F-8
0.001 to 0.099	100	F-9

C - DECIMAL #1

IF β MAX. IS ≥ 100 PUNCH HOLE B-7

M8625349

II Large Signal β Test (Pulsed) h_{FE} where I_B is greater than 1ma (A2)

A - Set up #1

1 - Calculate approx base drive

$$I_B \approx \frac{I_c}{\beta_{MIN}}$$

2 - Choose closest available value and punch holes according to tables a + b

Table (a)

Rc	I_B (amp)	Punch Set Up #1
0.1 Ω	1.0	B1, B2
0.2 Ω	.50	B2
0.4 Ω	.25	B1
0.8 Ω	.125	None

Table (b)

Range Multiplier	Punch Set Up #1
X 1	None
X 0.1	B3
X .01	B4

3 - Find $V_{comp} = (1+R_c) \times I_{C\,amp}$

Test voltage = Collector voltage (β_{test}) + V_{comp}

B - Scale #1

Test circuit output, $e_o = 0.1 \times \beta_{MAX} \times$ Range Mult.

$$\text{Scale, } Sc = \frac{E_o\,/\,9.9}{e_o}$$

1 Calculate Sc from above eq. or use e_o in table

2 Punch holes according to table:

e_o	Sc	Punch Scale #1
1 to 9.9	1	No Holes
0.1 to 0.99	10	F-8
0.001 to 0.099	100	F-9

C - Decimal #1

If $\beta_{MAX} \geq 100$ Punch Hole B-7

III DC β, (h_{FE}) where I_B = 1ma or less (A3)

A - Set up #1

1 Calculate approx base drive

$$I_B \approx \frac{I_c}{\beta_{MIN}}$$

2 CHOOSE CLOSEST AVAILABLE VALUE AND PUNCH HOLES ACCORDING TO TABLES a + b

TABLE a)

Rc	I_B ma	PUNCH SET UP #1
10 Ω	1.0	B1, B2
20 Ω	.50	B2
40 Ω	.25	B1
80 Ω	.125	NONE

TABLE b)

RANGE MULTIP.	PUNCH SET UP #1
X 1	NONE
X .1	B3
X .01	B4

3 - FIND $V_{COMP} = (1+R_C) \times I_C$ amp

TEST VOLTAGE = COLLECTOR VOLTAGE (β TEST) + V_{COMP}

B SCALE #1

TEST CIRCUIT OUTPUT $e_o = .01 \times \beta_{MAX} \times$ RANGE MULT.

$$\text{SCALE, } Sc = \frac{E_o\,|^{9.9}}{e_o}$$

1. CALCULATE Sc FROM ABOVE EQ. OR USE e_o IN TABLE
2. PUNCH HOLES ACCORDING TO TABLE:

e_o	Sc	PUNCH SCALE #1
1 To 9.9	1	NO HOLES
0.1 To 0.99	10	F-8
0.01 To 0.099	100	F-9
0.001 To 0.0099	1000	F-8, F-9

C DECIMAL #1

IF β MAX $\geq$ 100 PUNCH HOLE B-7

IV I_{CBO} TEST

I_{CBO} IS NORMALLY EXPRESSED IN μA. CONSEQUENTLY THE SETUP #2, SCALE #2 + DECIMAL #2 ALL DEPEND ON THE NOMINAL VALUE OF I_{CBO} AND MUST BE PUNCHED ACCORDING TO THE FOLLOWING TABLE:

I_{CBO} (MAX) μa	PUNCH SET UP #2	Sc	PUNCH SCALE #2	PUNCH DECIMAL #2	MEASURING RESISTOR
0.1 ** - 0.99	B-5, B-6	X100	E-9	B-8, B-9	100K
1.0 - 9.9	B-5	X100	E-9	B-9	10K
10 - 99	B-5	X10	E-8	NO HOLES	10K
100 - 990	B-6	X100	E-9	B-8	100 Ω
*1.0 To 9.9 ma	B-6	X10	E-8	B-9	100 Ω
*10 To 99 ma	B-6	X1	NO HOLES	NO HOLES	100 Ω

* ENTER ON CARD THAT I_{CBO} IS IN ma.

** READOUT OF I_{CBO} VALUES LESS THAN 0.1μa ARE NOT ACCURATE, DO NOT ATTEMPT

I BV_{CBO} TEST

THE CURRENT FLOWING WHEN RATED BV_{CBO} IS APPLIED (I_{BV}) MUST WORK WITH THE MEASURING RESISTOR PREVIOUSLY CHOSEN FOR I_{CBO} OR:

$I_{CBO(\mu a)}$	R_M
< .99	100K
1.0 - 99	10K
> 100	100 Ω

① SCALE #3

THE SCALE MUST BE CHOSEN TO USE THE RESULTING VOLTAGE.

$$e_o = I_{BV} R_M$$ WHERE I_{BV} IS THE I_{CBO} AT BV_{CBO}

IF $E_o|_1^{9.9}$ = OUTPUT VOLTAGE SCALED UP TO BETWEEN 1 AND 9.9 VOLTS

THEN

$$Sc\text{-}3 = \frac{E_o|_1^{9.9}}{e_o}$$ AND CAN BE PUNCHED FROM OR USE e_o

e_o	Sc	PUNCH SCALE #3
1 To 9.9	1	NO HOLES
0.1 To 0.99	10	D-8
0.01 To 0.099	100	D-9
0.001 To 0.0099	1000	D-8, D-9

② DECIMAL #3

DEC #3 IS PLACED ACCORDING TO THE VALUE OF I_{BV} AS FOLLOWS:

$I_{BV(MAX)\mu a}$	PUNCH DECIMAL #3
0.1 ** .99	C-8, C-9
1.0 - 9.9	C-9
10 - 99	NO HOLES
100 - 990	C-8
* 1.0 - 9.9 ma.	C-9
* 10 - 99 ma	NO HOLES

* ENTER ON CARD THAT I_{BV} IS IN ma.

** READOUT OF I_{BV} VALUES LESS THAN 0.1 μa ARE NOT ACCURATE, DO NOT PROGRAM.

M8625349

BY G. Hand DATE 6 Feb 62 SUBJECT Test Circuit (Zener) 31 January 1963
CHKD. BY J. Ryan DATE 12-10-62 Program - Set up - Scale Decimal SHEET NO. 1 OF 1
JOB NO. 60062

I Zener Voltage Test

Set Up, Decimal & Auxilliary Voltage (V_3) should be punched according to the following table:

To Zener Current Add I_{SHUNT} Factor	$V_{Z\ MAX}$ Volts	Punch Set Up # 2	Punch Dec # 3	Note V_3 + VC_2
None	1-9.9	No Holes	C-9	No Holes
$\frac{V_Z}{100} = I_{SHUNT}$ in MA	10-99	B-6	No Holes	*Program So That
$\frac{V_Z}{1000} = I_{SHUNT}$ in MA	100-250	B-5, B-6	C-8	$V_3 = V_{Z\ MAX} - 25$ with $V_3 > 0$

Program Zener Test Current = Specified I_{ZT} + $I_{SHUNT(MA)}$ Factor

* a V_3 is required only when $V_{Z\ MAX} \geq 40$ volts, $V_3 = V_{Z\ MAX} - 25$ volts

II Zener Impedance Test

a Set Up # 1 as a Function of $V_{Z\ MAX}$

$V_{Z\ MAX}$	Punch Set Up # 1	Voltage Divider	Power Supply Used
1-9.9	No Holes	—	A1900
10-99	B-2	$\frac{1}{10}$	A1900 and A1500
100-250	B-1, B-2	$\frac{1}{100}$	A1900 and A1500

b Scale + Decimal as a Function of $Z_{Z\ MAX}$.

$Z_{Z\ MAX}$.	Punch Scale # 1	Punch Decimal # 1	Scaling Amp.
< 99	F-9	No Holes	X100
100-990	F-8	B-7	X10
≥ 1000*	No Holes	B-7	X1

* Enter on card: "Read Z_Z X 10 ohms"

M8625349

BY G. HAND DATE 11-FEB-62 SUBJECT TEST CIRCUIT (DIODE) SHEET NO. 1 OF 1
CHKD. BY J.J. Ryan DATE 19-10-62 PROGRAM - SET UP - SCALE - DECIMAL JOB NO. 60062

I - FORWARD CURRENT TEST

A - COMPUTE TEST VOLTAGE (V_T)

$$V_T = V_F + 2V_S$$

V_F = SPECIFIED FWD VOLTS

$V_S = \frac{I_{F(MIN)}\ ma.}{1000}$ (SENSING VOLTAGE)

ENTER V_T ON WORK SHEET + PUNCH V_2 HOLES TO ITS VALUE.

B - SCALE - Sc#1 = $\frac{V_S\,/_{1}^{9.9}}{V_S}$ ($V_S\,/_{1}^{9.9}$ IS V_S SCALED UP TO FALL BETWEEN 1 & 9.9 V.)

PUNCH Sc#1 ACCORDING TO CHART USING EQ. FOR Sc#1 or actual value of V_S.

V_S	Sc#1	PUNCH SCALE #1	PUNCH DECIMAL #1	MEASURING RESISTOR
1 to 9.9	1	NO HOLES	* B-9	1Ω
0.1 to 0.99	10	F-8	B-7	1Ω
0.01 to 0.099	100	F-9	—	1Ω
0.001 to 0.0099	1000	F-8, F-9	B-9	1Ω
0.0001 To 0.00099	100	F9 - B2	B-7, B-9	100Ω

C - DECIMAL #1

PUNCH DECIMAL #1 HOLES ACCORDING TO VALUE OF V_S FROM ABOVE TABLE. * ENTER ON CARD THAT Ifwd IS IN AMPS.

II. - REVERSE CURRENT TEST - THE ASSIGNMENT OF SET UP, SCALE, AND DECIMAL PLACEMENT DEPEND UPON THE MAX. VALUE OF I_{REV} ANTICIPATED. PUNCH HOLES ACCORDING TO THE FOLLOWING TABLE

$I_{REV\ (MAX)}$ μa	PUNCH SET UP #2	PUNCH SCALE #3	PUNCH DECIMAL #3
0.1 ** - 0.99	B-5, B-6	D-9	C-8, C-9
1.0 - 9.9	B-5	D-9	C-9
10 - 99	B-5	D-8	NO HOLES
100 - 990	B-6	D-9	C-8
* 1.0 - 9.9 ma	B-6	D-8	C-9
* 10 - 50 ma	B-6	NO HOLES	NO HOLES

* ENTER ON CARD THAT I_{REV} IS IN Ma.

** READOUT OF I_{REV} VALUES LESS THAN 0.1 μa ARE NOT ACCURATE, DO NOT PROGRAM.

BY G. Hand DATE 10 Jan 62 SUBJECT TRANSFER FUNCTIONS 31 January 1963 SHEET NO. 1 OF 3

CHKD. BY ..... DATE ..... A-1600 JOB NO. 600.62

VOLTAGE VS HOLES PUNCHED

.25 TO 50 VOLTS

TO OBTAIN VOLTAGE SHOWN AT LEFT COLUMN PUNCH HOLES INDICATED UNDER VOLTAGE # COLUMN

NOTE - V_2 MUST BE REVERSED BY PUNCHING I_8 FOR TESTING DIODE FORWARD CURRENT.

DESIRED VOLTS	FOR V_1 PUNCH	FOR V_2 PUNCH	FOR V_3 PUNCH
0.25	NO HOLES	NO HOLES	NO HOLES
0.50	I_6	H_5	G_5
0.75	I_5	H_4	G_4
1.00	I_5, I_6	H_4, H_5	G_4, G_5
1.25	I_4	H_3	G_3
1.50	I_4, I_6	H_3, H_5	G_3, G_5
1.75	I_4, I_5	H_3, H_4	G_3, G_4
2.0	I_4, I_5, I_6	H_3, H_4, H_5	G_3, G_4, G_5
2.5	I_3	H_2	G_2
3.0	I_3, I_6	H_2, H_5	G_2, G_5
3.5	I_3, I_5	H_2, H_4	G_2, G_4
4.0	I_3, I_5, I_6	H_2, H_4, H_5	G_2, G_4, G_5
4.5	I_3, I_4	H_2, H_3	G_2, G_3
5.0	I_3, I_4, I_6	H_2, H_3, H_5	G_2, G_3, G_5
5.5	I_3, I_4, I_5	H_2, H_3, H_4	G_2, G_3, G_4
6.0	I_3, I_4, I_5, I_6	H_2, H_3, H_4, H_5	G_2, G_3, G_4, G_5
7.0	I_2	H_1	G_1
8.0	I_2, I_6	H_1, H_5	G_1, G_5
9.0	I_2, I_5	H_1, H_4	G_1, G_4
10.0	I_2, I_5, I_6	H_1, H_4, H_5	G_1, G_4, G_5
11.0	I_2, I_4	H_1, H_3	G_1, G_3
12.0	I_2, I_4, I_6	H_1, H_3, H_5	G_1, G_3, G_5
13.0	I_2, I_4, I_5	H_1, H_3, H_4	G_1, G_3, G_4
14.0	I_2, I_4, I_5, I_6	H_1, H_3, H_4, H_5	G_1, G_3, G_4, G_5
15.0	I_2, I_3	H_1, H_2	G_1, G_2
20.0	I_2, I_3, I_6	H_1, H_2, H_5	G_1, G_2, G_5
25.0	I_2, I_3, I_5	H_1, H_2, H_4	G_1, G_2, G_4
30.0	$I_2, I_3 I_5, I_6$	H_1, H_2, H_4, H_5	G_1, G_2, G_4, G_5
35.0	I_2, I_3, I_4	H_1, H_2, H_3	G_1, G_2, G_3
40.0	I_2, I_3, I_4, I_6	H_1, H_2, H_3, H_5	G_1, G_2, G_3, G_5
45.0	I_2, I_3, I_4, I_5	H_1, H_2, H_3, H_4	G_1, G_2, G_3, G_4
50.0	I_2, I_3, I_4, I_5, I_6	H_1, H_2, H_3, H_4, H_5	G_1, G_2, G_3, G_4, G_5

BY G. Hand DATE 11 JAN 62 SUBJECT TRANSFER FUNCTIONS SHEET NO. 2 OF 3
CHKD. BY ..... DATE ..... A-1400 — A1500 JOB NO. 60062
VOLTAGE VS HOLES PUNCHED

50 TO 505 VOLTS

VOLTAGE CHOICE HOLES MUST BE PUNCHED AS FOLLOWS:

	V_C #1 WHEN V_2 USED	V_C #2 WHEN V_3 USED
FOR VOLTAGE RANGE OF 50-280V AS CONTROLLED BELOW PUNCH	I7	H7
TO ADD 225V TO ABOVE ALSO PUNCH	I8	H8

TO OBTAIN VOLTS ↓	PUNCH → HOLES FOR V_2	FOR V_3
50	NO HOLES	NO HOLES
55	H_5	G_5
60	H_4	G_4
65	H_4, H_5	G_4, G_5
70	H_3	G_3
75	H_3, H_5	G_3, G_5
80	H_3, H_4	G_3, G_4
85	H_3, H_4, H_5	G_3, G_4, G_5
90	H_2	G_2
95	H_2, H_5	G_2, G_5
100	H_2, H_4	G_2, G_4
105	H_2, H_4, H_5	G_2, G_4, G_5
110	H_2, H_3	G_2, G_3
115	H_2, H_3, H_5	G_2, G_3, G_5
120	H_2, H_3, H_4	G_2, G_3, G_4
125	H_2, H_3, H_4, H_5	G_2, G_3, G_4, G_5
130	H_1	G_1
140	H_1, H_5	G_1, G_5
150	H_1, H_4	G_1, G_4
160	H_1, H_4, H_5	G_1, G_4, G_5
170	H_1, H_3	G_1, G_3
180	H_1, H_3, H_5	G_1, G_3, G_5
190	H_1, H_3, H_4	G_1, G_3, G_4
200	H_1, H_3, H_4, H_5	G_1, G_3, G_4, G_5
210	H_1, H_2	G_1, G_2
220	H_1, H_2, H_5	G_1, G_2, G_5
230	H_1, H_2, H_4	G_1, G_2, G_4
240	H_1, H_2, H_4, H_5	G_1, G_2, G_4, G_5
250	H_1, H_2, H_3	G_1, G_2, G_3
260	H_1, H_2, H_3, H_5	G_1, G_2, G_3, G_5
270	H_1, H_2, H_3, H_4	G_1, G_2, G_3, G_4
280	H_1, H_2, H_3, H_4, H_5	G_1, G_2, G_3, G_4, G_5

NOTE - MAX VOLTAGE OUTPUT OF A-1900 = 50V
DO NOT PROGRAM CURRENT INTO
KNOWN LOAD TO EXCEED THIS VALUE !!

TO OBTAIN
PUNCH → HOLES

MILS ↓	
0.25	No Holes
0.50	H_9
0.75	G_9
1.0	G_9, H_9
1.25	G_8
1.50	G_8, H_9
1.75	G_8, G_9
2.00	G_8, G_9, H_9
3.0	G_7
4.0	G_7, H_9
5.0	G_7, G_9
6.0	G_7, G_9, H_9
7.0	G_7, G_8
8.0	G_7, G_8, H_9
9.0	G_7, G_8, G_9
10.0	G_7, G_8, G_9, H_9
15.0	G_6, G_7
20.0	G_6, G_7, H_9
25.0	G_6, G_7, G_9
30.0	G_6, G_7, G_9, H_9
35.0	G_6, G_7, G_8
40.0	G_6, G_7, G_8, H_9
45.0	G_6, G_7, G_8, G_9
50.0	G_6, G_7, G_8, G_9, H_9

M8625349

BY G. HAND DATE 23 JAN 62 SUBJECT LIMIT VALUES

CHKD. BY ..... DATE .....

NUMERICAL VALUE VS. HOLES PUNCHED

31 January 1963

SHEET NO. 1 OF 1

JOB NO. 60062

FOR LIMIT #1, PUNCH F SERIES HOLES; LIMIT #2, PUNCH E SERIES HOLES
LIMIT #3, PUNCH D SERIES HOLES; LIMIT #4, PUNCH C SERIES HOLES

LIMIT VALUE	HOLE NUMBER 1	2	3	4	5	6	7
01	X	X	X	X	X	X	
02	X	X	X	X	X		X
03	X	X	X	X	X		
04	X	X	X	X		X	X
05	X	X	X	X		X	
06	X	X	X	X			X
07	X	X	X	X			
08	X	X	X		X	X	X
09	X	X	X		X	X	
10	X	X	X		X		X
11	X	X	X		X		
12	X	X	X			X	X
13	X	X	X			X	
14	X	X	X				X
15	X	X	X				
16	X	X		X	X	X	X
17	X	X		X	X	X	
18	X	X		X	X		X
19	X	X		X	X		
20	X	X		X		X	X
21	X	X		X		X	
22	X	X		X			X
23	X	X		X			
24	X	X			X	X	X
25	X	X			X	X	
26	X	X			X		X
27	X	X			X		
28	X	X				X	X
29	X	X				X	
30	X	X					X
31	X	X					
32	X		X	X	X	X	X
33	X		X	X	X	X	
34	X		X	X	X		X

LIMIT VALUE	HOLE NUMBER 1	2	3	4	5	6	7
35	X		X	X	X		
36	X		X	X		X	X
37	X		X	X		X	
38	X		X	X			X
39	X		X	X			
40	X		X		X	X	X
41	X		X		X	X	
42	X		X		X		X
43	X		X		X		
44	X		X			X	X
45	X		X			X	
46	X		X				X
47	X		X				
48	X			X	X	X	X
49	X			X	X	X	
50	X			X	X		X
51	X			X	X		
52	X			X		X	X
53	X			X		X	
54	X			X			X
55	X			X			
56	X				X	X	X
57	X				X	X	
58	X				X		X
59	X				X		
60	X					X	X
61	X					X	
62	X						X
63	X						
64		X	X	X	X	X	X
65		X	X	X	X	X	
66		X	X	X	X		X
67		X	X	X	X		
68		X	X	X		X	X

LIMIT VALUE	HOLE NUMBER 1	2	3	4	5	6	7
69		X	X	X		X	
70		X	X	X			X
71		X	X	X			
72		X	X		X	X	X
73		X	X		X	X	
74		X	X		X		X
75		X	X		X		
76		X	X			X	X
77		X	X			X	
78		X	X				X
79		X	X				
80		X		X	X	X	X
81		X		X	X	X	
82		X		X	X		X
83		X		X	X		
84		X		X		X	X
85		X		X		X	
86		X		X			X
87		X		X			
88		X			X	X	X
89		X			X	X	
90		X			X		X
91		X			X		
92		X				X	X
93		X				X	
94		X					X
95		X					
96			X	X	X	X	X
97			X	X	X	X	
98			X	X	X		X
99			X	X	X		

TEST PARAGRAPHS IN MIL-T-55202	TEST POSITION	LIMITS A300	I_B A500 A600 A700	I_{REG} A1900	.25 to 50 A1600	50 to 505 A1400 A1500	DIVIDER A2000	MEASURING RESISTOR A600 A700 A800	SCALING AMP. A900	DECIMAL A1300
TEST CARD #1										
USED IN;	5	50			50			10Ω	X1000	RIGHT ZERO
4.9.2.3 (a)	6	96			50			10Ω	X1000	RIGHT ZERO
4.9.2.4 (a)	8	10			50			100Ω	X 100	LEFT ZERO
PNP	9	03			50			100Ω	X 10	CENT. DEC.
TEST CARD #2										
USED IN;	1	128								
4.9.2.3 (f)	2	128								
4.9.2.5 (a)	8	128			0.25			1Ω	X 10	RIGHT ZERO
4.9.6.1 (a) PNP	9	128			50			1Ω	X 10	RIGHT ZERO
TEST CARD # 3										
USED IN;	1		20μa.	50ma	2.5V					
4.9.2.6.2 (a)	2		20μa.	50ma	2.5V					
4.9.2.7.1 (g)	3		1 amp		2.5V			0.8Ω		
4.9.2.7.1 (j)	4		1 amp		2.5V			0.8Ω		
4.9.2.7.2 (c)	5		1ma		2.5V			80Ω		
4.9.2.7.3 (c)	6		1ma		2.5V			80Ω		
4.9.2.9 (a) NPN	8					50V				
	9					495V		1Ω	X1000	
								1Ω	X1000	
TEST CARD # 4										
USED IN;	1		20μa	50ma	2.5V					
4.9.2.6.3 (a)	2		20μa	50ma	2.5V					
4.9.2.7.1 (g)	3		1 amp		2.5V			0.8Ω		
4.9.2.7.2 (a)	4		1 amp		2.5V			0.8Ω		
4.9.2.7.3 (a)	5		1ma		2.5V			80Ω		
	6		1ma		2.5V			80Ω		
	10			50ma						
PNP	11			50ma						
TEST CARD #5										
USED IN;	1		0.2μa	0.25ma	10V					
4.9.2.6.3 (a)	2		0.2μa	0.25ma	10V					
4.9.2.7.1 (a)	3		1.25ma		10V					
4.9.2.7.2 (a)	4		1.25ma		10V			0.8Ω		
4.9.2.7.3 (a)	5		1.25μa		10V			0.8Ω		
PNP	6		1.25μa		10V			80Ω	X100	
	10			0.25ma				80Ω	X100	
TEST CARD #6										
USED IN	7				5			100Ω	X1	
4.9.2.7.4 (a)										
4.9.2.7.5 (a)	11			0.75ma		70	÷10			
DIODE — ZENER										
TEST CARD #7										
USED IN										
4.9.2.7.6 (a)	12			10ma					X10	RIGHT ZERO
ZENER										

EXAMPLE

31 January 1963

Card # ______

1. Zener Diode Type 1N3034B ORD. # —

MIL # MIL-S-19500/115A (N)

2. Additional Data for Printing on Card —

______

3. Zener Test Current (I_{zt}) = 6.5 MA

Current Program = I_{zt} + I_{SHUNT} = 6.5 MA +

0.41 MA = 6.91 MA

Current Holes G7, G8   7.0 ma - nearest value

4. Zener Voltage (V_z)

a. Min. 37.1 V   Limit #1 Holes F 1, 3, 4, 6

b. Max. 40.9 V   Limit #4 Holes C 1, 3, 5, 6

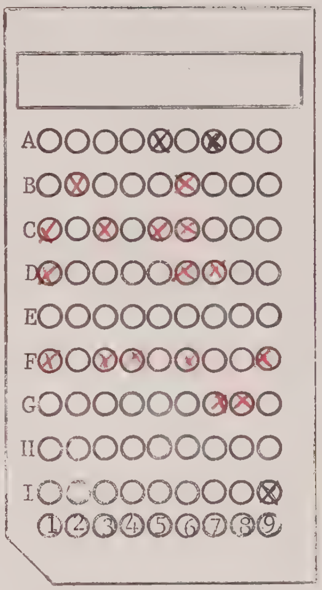

x = Punch Hole

5. Test Circuit: Set up #2 Holes B6

Decimal #3 Holes —

$V_3 = V_z$ Max. - 25 —

Voltage Choice #2 Holes —

Voltage #3 Holes —

6. Maximum Zener Impedance 60 ohms (Z_z)

Limit #3 Holes D 1, 6, 7

7. Test Circuit: Set up #1 Holes B2

Scale #1 Holes F9

Decimal #1 Holes —

8. Transfer Holes to be Punched to Card Diagram, including A5, A7, and I9

9. Remarks:

Data Source MIL-S-19500/115A (N)

Prepared By Roy H. Date 4-28-62

Checked By G. Hand Date 12-4-62

Entered on Master By A.B. Date 12-7-62

M8625349

EXAMPLE

31 January 1963

Card # _____

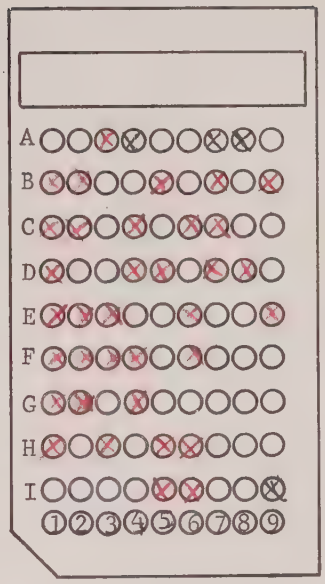

x = Punch Hole

1. Transistor Type 2N404 ORD. # —

   MIL # MIL-T-19500/20

2. Additional Data for Printing on Card —

3. Polarity: PNP- No Hole ✓, NPN- Punch A-9

4. If β is h_{fe}: Punch A-1, Emitter Current ____ ma

   Punch I_e Holes ____

5. If β is H_{FE}: $I_B = \frac{I_c}{H_{FE(low)}} = \frac{50 \text{ ma}}{50} = 1 \text{ ma}$

   If I_B: > 1 ma Punch A-2, ≤ 1 ma Punch A-3 ✓

6. Collector Voltage (β Test) 0.25 V + V_{COMP} 1.43 Volts = Test Volage 1.68 vol

   Nearest V_1 voltage 1.75 volts. V_1 Holes I4, I5

7. Test Circuit: Set up #1 B_1, B_2 Scale #1 — Decimal #1 B7

8. β Low Limit 50 Limit #1 F 1, 2, 3, 4, 6

   β High Limit 130 Limit #2 H6, E 1, 2, 3, 6

   ~~(If no High Limit, Punch E 1,2,3,4,5,6,7)~~

9. I_{cbo} Test Voltage 12V. Voltage Choice #1 — V_2 H1, H3, H5

10. I_{cbo} (Max.) 5 μamp Limit #3 D 1, 4, 5, 7

11. Test Circuit: Set up #2 B5 Scale #2 E9 Decimal #2 B9

12. Rated BV_{cbo} 25V. Voltage Choice #2 — V_3 G1, G2, G4

13. Breakdown Current (Max.) 20 μamp Limit #4 C 1, 2, 4, 6, 7

14. Test Circuit: Scale #3 D8 Decimal #3 —

15. Transfer Holes to be Punched to Card Diagram, including A4, A7, A8, and I9.

16. Remarks:

Data Source MIL-T-19500/20

Prepared By Larry Rudbell Date 2-19-62

Checked By John Hurst Date 11-9-62

Entered on Master By A. B Date 11-28-62

M8625349

Card # _____

1. Diode Type 1N539 ORD. # 9062658

   MIL # —

2. Additional Data for Printing on Card —

3. Specified Forward Voltage 1.1 V

   Test Voltage (VT) 2.1 V

   nearest value V_2 Holes H3, 4, 5

4. Test Circuit: Scale #1 Holes F8

   Decimal #1 Holes B7

5. Forward Current Minimum Value 500 ma

   Limit #2 Holes E 1, 4, 5, 7

6. Specified Reverse Voltage 300 V

   VC_2 Holes G3 G5

   V_3 Holes H7 H8

7. Test Circuit: Set up #2 Holes B5

   Scale #3 Holes D8

   Decimal #3 Holes —

8. Reverse Current Maximum Value 10 μa

   Limit #4 Holes C 1, 2, 3, 5, 7

9. Transfer Holes to be Punched to Card Diagram, including A4, A7, I8 and I9.

10. Remarks:

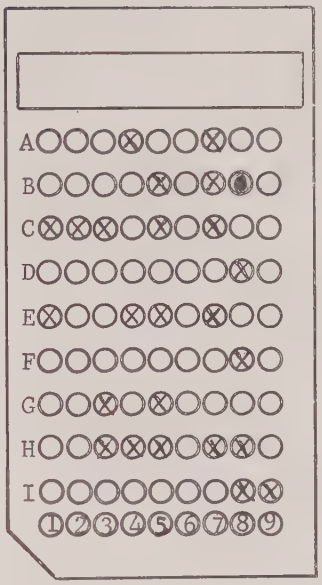

x = Punch Hole

Data Source Orig Dwg #9062658

Prepared By Roy Hermanson Date 7-6-62

Checked By T. J. Ryan Date 12-5-62

Entered on Master By A. B. Date 12-7-62

Card #_____

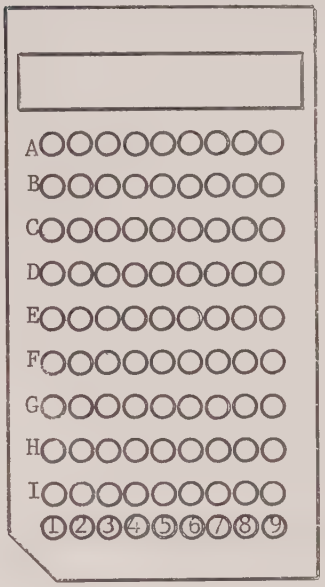

x = Punch Hole

1. Zener Diode Type_____ORD. #_____

   MIL #_____

2. Additional Data for Printing on Card_____

   _____

3. Zener Test Current (I_{zt}) = _____ma

   Current Program = I_{zt} + I_{shunt} = _____ma + _____ma

   = _____ma

   Current Holes_____

4. Zener Voltage (V_Z)

   a. Min._____V Limit #1 Holes F_____

   b. Max._____V Limit #4 Holes C_____

5. Test Circuit: Set up #2 Holes _____

   Decimal #3 Holes_____

   V_3 = V_z Max. - 25_____

   Voltage Choice #2 Holes_____

   Voltage #3 Holes _____

6. Maximum Zener Impedance _____ohms (Z_z)

   Limit #3 Holes D_____

7. Test Circuit: Set up #1 Holes_____

   Scale #1 Holes_____

   Decimal #1 Holes_____

8. Transfer Holes to be Punched to Card Diagram, including A5, A7, and I9

9. Remarks:

   Data Source_____

   Prepared by_____Date_____

   Checked By_____Date_____

   Entered on Master By_____Date_____

31 January 1963

Card #_____

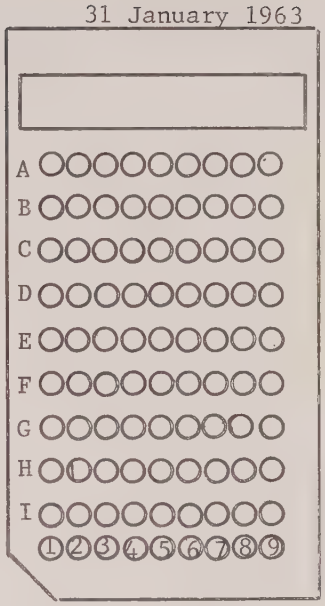

x = Punch Hole

1. Transistor Type_____ ORD. #_____

   MIL #_____

2. Additional Data for Printing on Card_____

   _____

   _____

3. Polarity: PNP-No Hole ____, NPN- Punch A-9 _____

4. If β is h_{fe}: Punch A-1, Emitter Current_____ma

   Punch I_e Holes_____

5. If β is H_{FE}: $I_B = \frac{I_c}{H_{FE\ (low)}}$ = _____ma = _____ma

   If I_B: > 1 ma Punch A-2, ≤ 1 ma Punch A-3

6. Collector Voltage (Test)_____V +V_{comp}_____Volts = Test Voltage_____Volts

   Nearest V_1 voltage _____volts. V_1 Holes_____

7. Test Circuit: Set up #1_____ Scale #1_____ Decimal #1_____

8. β Low Limit_____ Limit #1 F_____

   β High Limit_____ Limit #2 H6, E_____

   (If no High Limit Punch E 1,2,3,4,5,6,7)

9. I_{cbo} Test Voltage_____ Voltage Choice #1_____V_2_____

10. I_{cbo} (Max.)_____ Limit #3 D_____

11. Test Circuit: Set Up #2_____Scale #2_____Decimal #2_____

12. Rated BV_{cbo}_____Voltage Choice #2_____V_3_____

13. Breakdown Current (Max.)_____ Limit #4 C_____

14. Test Circuit: Scale #3_____Decimal #3_____

15. Transfer Holes to be Punched to Card Diagram, Including A4, A7, A8, and I9

16. Remarks:

    Data Source_____

    Prepared By_____Date_____

    Checked By_____Date_____

    Entered on Master By_____Date_____

M8625349

Card # _____

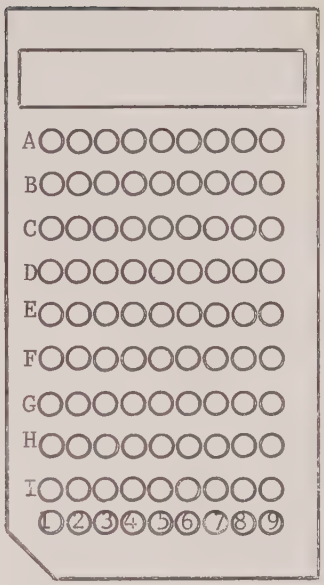

x = Punch Hole

1. Diode Type _____ ORD. # _____

   MIL #_____

2. Additional Data for Printing on Card _____

   _____

3. Specified Forward Voltage_____ V

   Test Voltage (VT)_____ V

   V_2 Holes_____

4. Test Circuit: Scale #1 Holes_____

   Decimal #1 Holes_____

5. Forward Current Minimum Value_____ ma

   Limit #2 Holes E

6. Specified Reverse Voltage_____ V

   VC_2 Holes_____

   V_3 Holes_____

7. Test Circuit: Set up #2 Holes_____

   Scale #3 Holes_____

   Decimal #3 Holes_____

8. Reverse Current Maximum Value_____ μa

   Limit #4 Holes C

9. Transfer Holes to be Punched to Card Diagram, including A4, A7, I8 and I9.

10. Remarks:

Data Source_____

Prepared by_____ Date_____

Checked By_____ Date_____

Entered on Master By_____ Date_____

APPENDIX VI

PROGRAM CARD, TRANSISTOR, TEST SET

CODE IDENT NO. 00000
ORDNANCE PART NO. 8625444

Program Card, Transistor, Test Card

M8625349

CODE IDENT NO. 00000
ORDNANCE PART NO. 8625444

Program Card, Transistor, Test Set

M8625349

Program Card, Transistor, Test Set

M8625349

Program Card, Transistor, Test Set

M8625349

31 January 1963

CODE IDENT NO. 00000
ORDNANCE PART NO. 8625444

Program Card, Transistor, Test Set

M8625349

CODE IDENT NO. 00000
ORDNANCE PART NO. 8625444

Program Card, Transistor, Test Set

M8625349

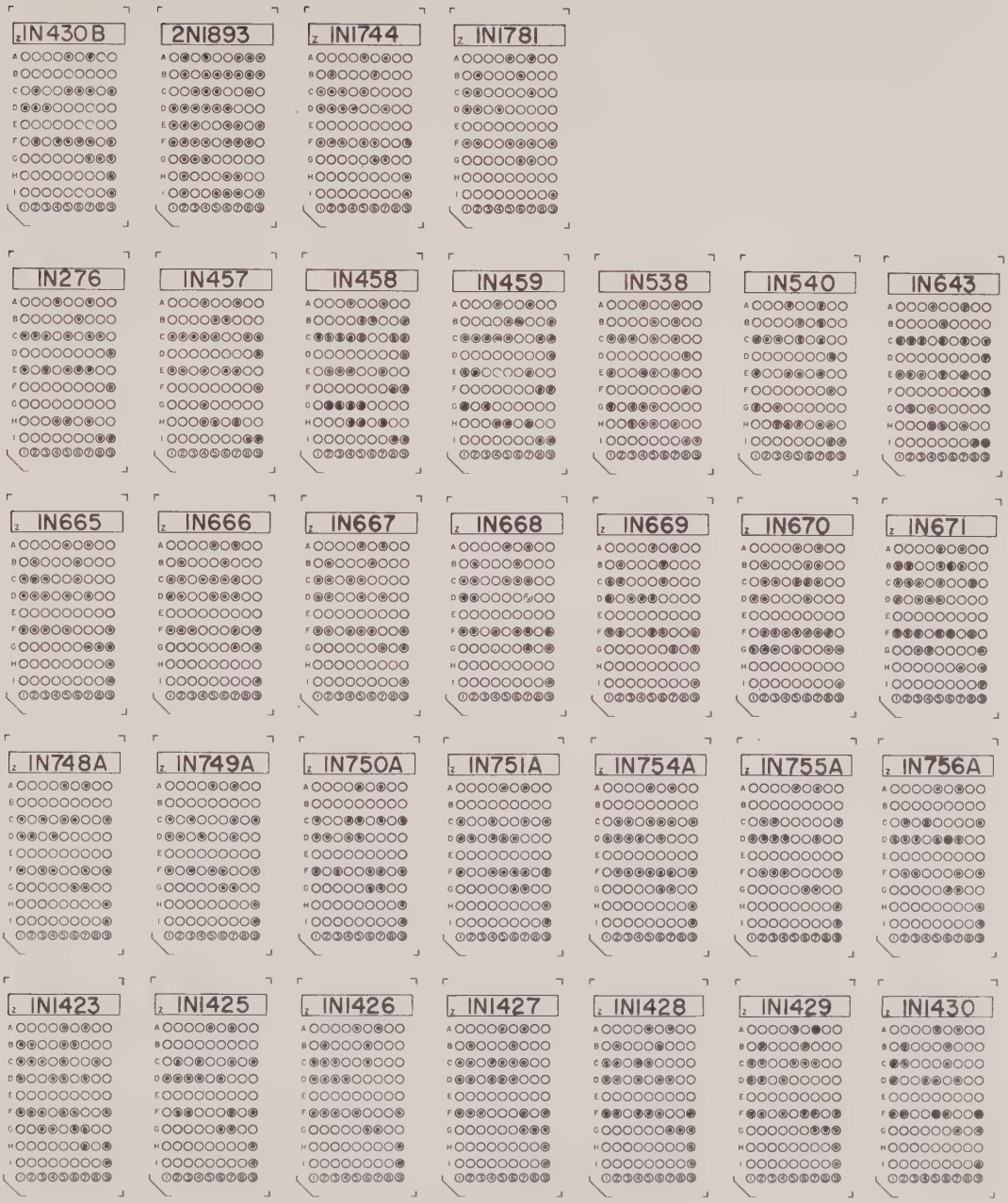

Program Card, Transistor, Test Set

M8625349

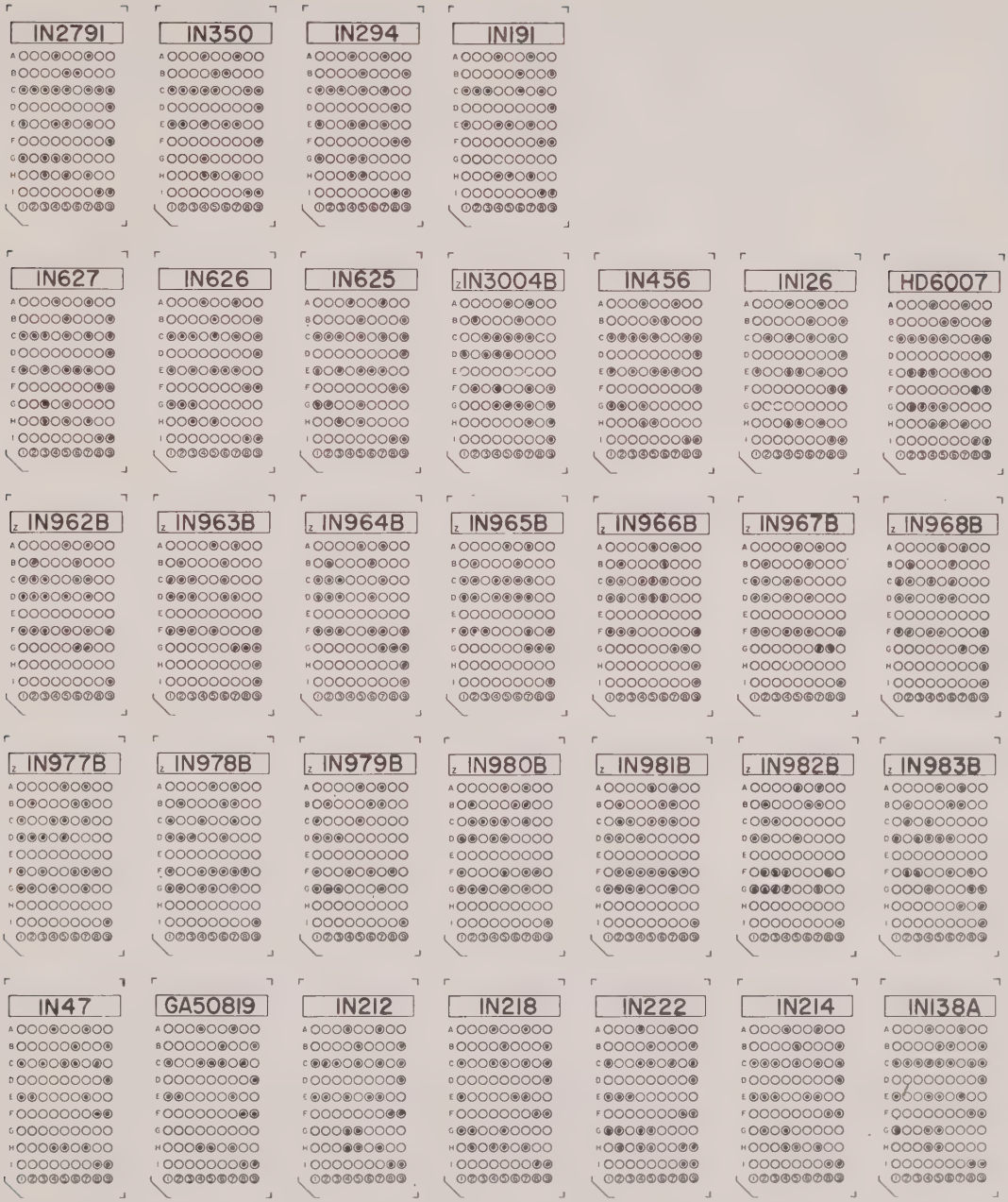

Program Card, Transistor, Test Set

CODE IDENT NO. 00000
ORDNANCE PART NO. 8625444

Program Card, Transistor, Test Set

M8625349

Program Card, Transistor, Test Set

M8625349

CODE IDENT NO. 00000
ORDNANCE PART NO. 8625444

Program Card, Transistor, Test Set

M8625349

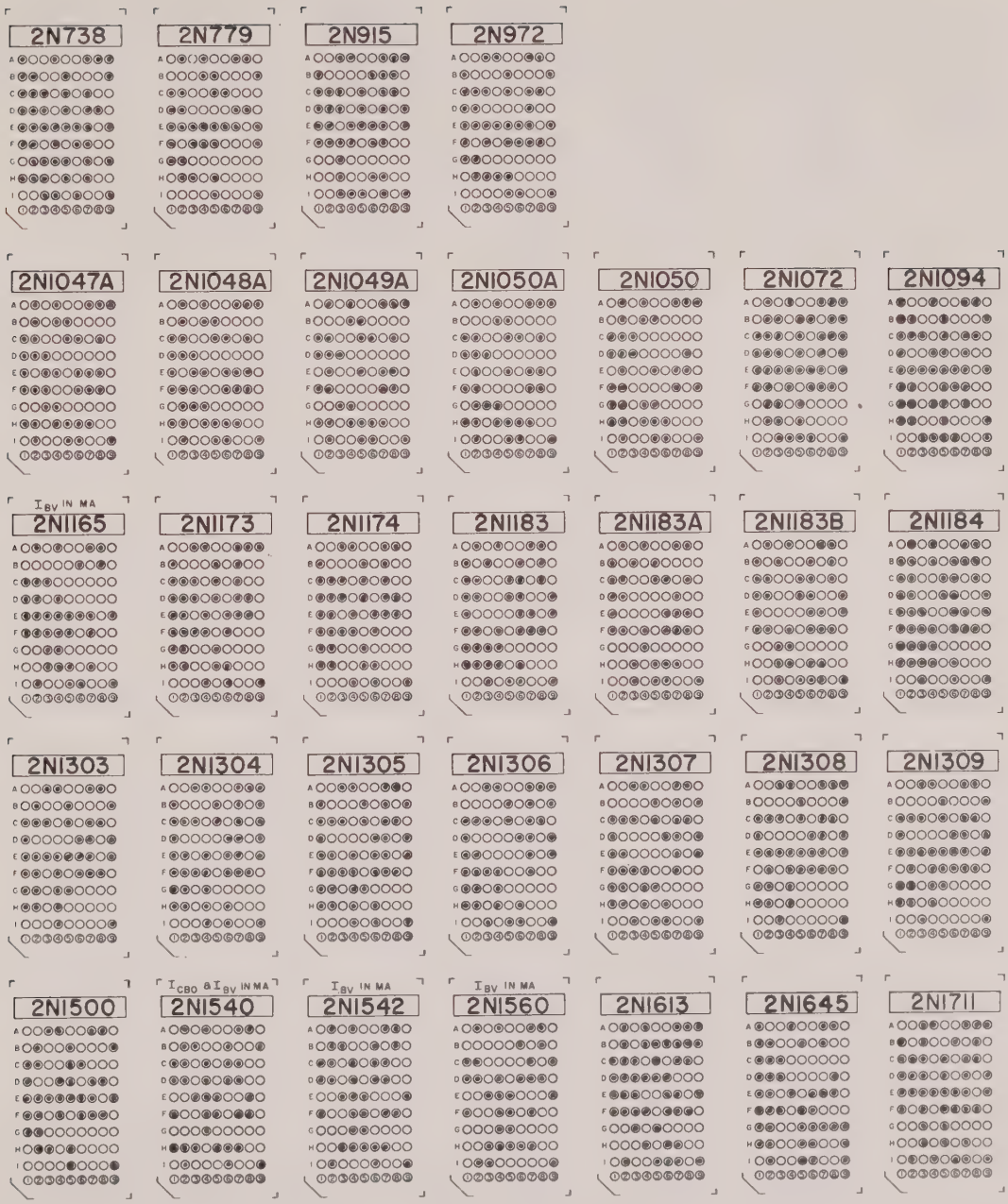

Program Card, Transistor, Test Set

M8625349

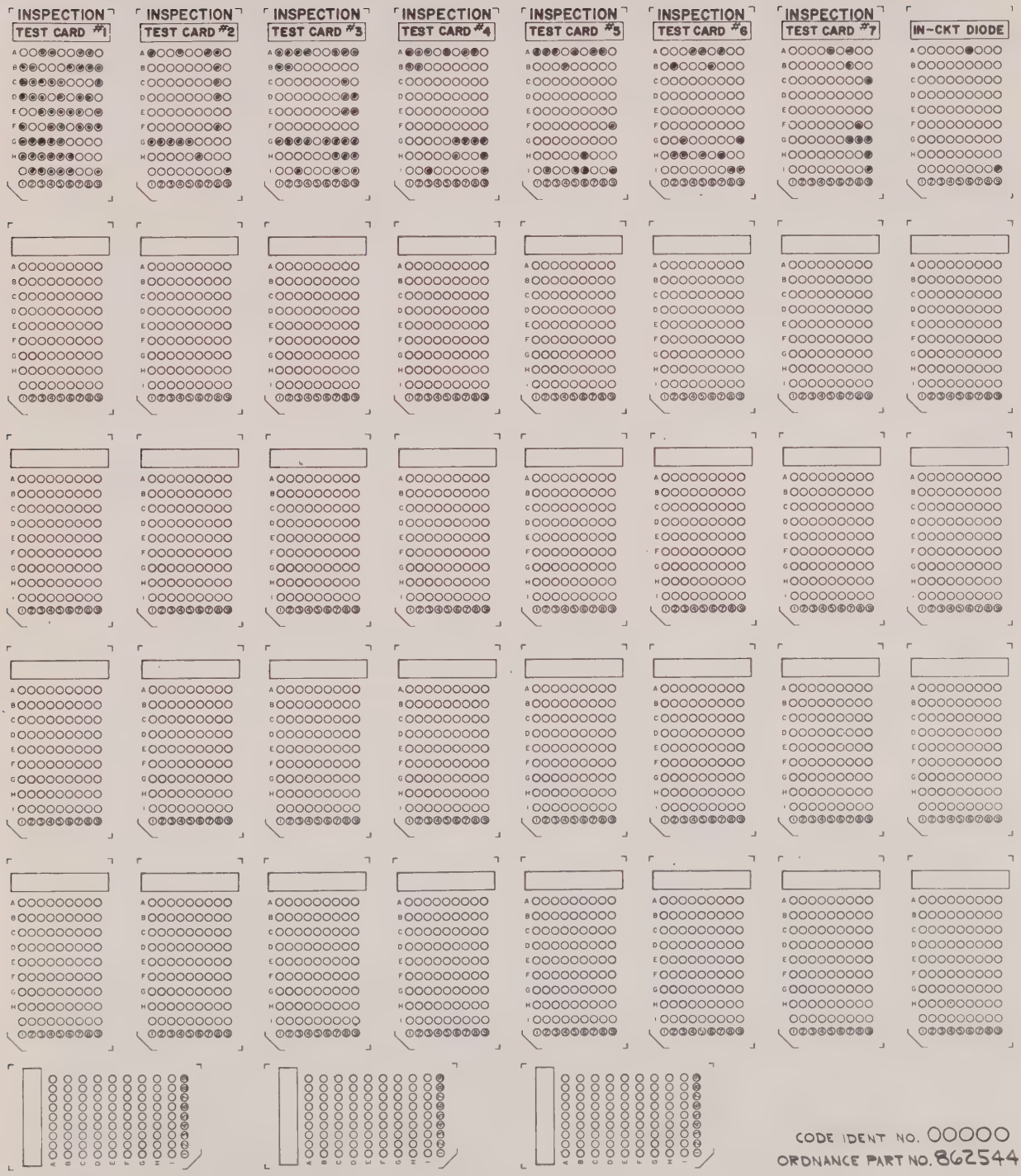

CODE IDENT NO. 00000
ORDNANCE PART NO. 8625444

Program Card, Transistor, Test Set

M8625349

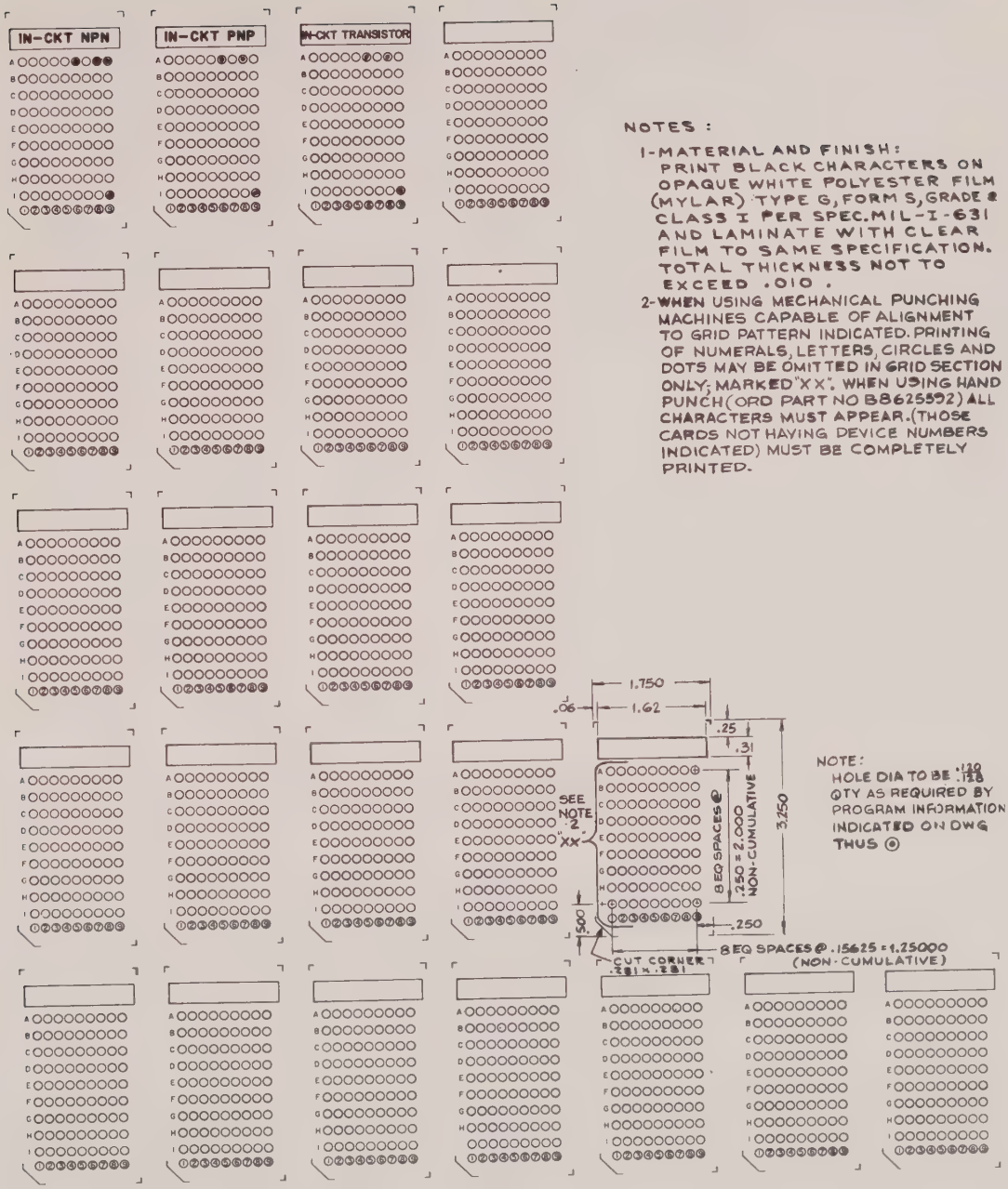

Program Card, Transistor, Test Set

M8625349

31 January 1963

APPENDIX VII

M8625349

APPENDIX VII

1. Automatic Lead Selector A100

1.1 Introduction

a. The circuitry of the Automatic Lead Selector A100 provides as many automatic test functions as possible in keeping with the unit's small size and simplicity of operation.

b. A stepping switch is used to provide for the following functions in the sequence indicated:

(1) Differentiation between germanium and silicon transistors or diodes and the application of appropriate test voltages for each type.

(2) Location of the base lead of the transistor (cathode of a diode) and simultaneous testing for short or open junction conditions.

(3) Gain tests for transistors for emitter finding.

(4) Provides for test result indications at the proper time.

1.2 Design principles (refer to block diagram Appendix VII Figure a)

a. The automatic selection of a transistor's leads requires a sequence of two and three terminal tests be made, data collected and remembered, and appropriate action taken. At each step in the sequence multiple circuits must be closed and opened positively, however, no great speed is required. These conditions dictate relay logic for the economical reliable operation of the Automatic Lead Selector. In greater detail the design must use a stepping switch for the sequencing control, multipole relays for critical switching, transistors for amplification, and diodes for the simpler logic functions.

b. The unit as designed will determine the material of the transistor (germanium or silicon) and find its leads regardless of how it was connected into the test socket provided that the transistor is an operating unit. Short circuits, open circuits, or the absence of gain are indicated as faults and the test is stopped.

c. The test sequence is as follows: the transistor is connected to the germanium-silicon finder, and its material determined, it is then sequenced to the base finding unit which examines the three leads to locate one and only one base among them, the remaining leads are then interrogated by the collector finding circuit, upon successfully finding the collector the sequence is stopped, the leads transferred (in proper order) to the rest of the tester and a signal is issued permitting further testing of the subject transistor. A fault detected in either base finding or collector finding circuits will also stop the sequence and issue a signal to the "No-Go" Indicator.

d. To function the Automatic Lead Selector needs only a transistor, information from the punched card to specify NPN or PNP, a test signal to initiate the action, and a reset signal to return the circuits to the standby condition after completion of a test.

1.3 Design theory (refer to Appendix III Electrical Schematic, Automatic Lead Selector A100, F8625378)

a. There are three basic elements sensed by the circuits of the Automatic Lead Selector.

b. The first of these is the work function of one diode of the transistor under test. An AC test voltage is applied to a junction of the

semiconductor under test, in each polarity successively testing for conduction each time. If non-linear conduction is found, the transistor is assumed to be germanium and the base finding tests are made with the 0.7 test voltage. If on the other hand no non-linear conduction is found the transistor is assumed to be silicon and the test voltage for the base finding tests is set at 1.4 volts. This test and voltage selection is necessary to protect certain small signal germanium transistors whose emitter-base junction can be broken down by a test voltage of 1.0 volts in the reverse direction.

c. The second fundamental test is the base finding procedure in which a pair of leads of the subject transistor are tied together and the test voltage applied between the pair of leads and the third lead. If the third lead is the base, no conduction will occur since both base-emitter and base-collector junctions will be back biased. If the third lead is not the base, conduction will occur since either of the above mentioned junctions will be forward biased. The test is repeated for each possible configuration of leads finding a single non-conductive case as the correct indication or either no non-conductive or more than one non-conductive configuration as an error indication. This same test locates the cathode of a diode.

d. Thirdly, when the base has been found a test circuit is activated which places the base and the other two leads in a simple amplifier circuit in which a 2.5 volt AC signal is applied across the two unknown leads. The difference in forward and inverse gain of the transistor will cause a negative signal to appear when the emitter is in the correct position.

Each possible configuration of base-emitter-collector is attempted until this signal is achieved at which time the lead transfer relay is activated, the selector sequence stopped and a signal sent out to allow the tester to begin further operations. If the sequence continues past the last possible correct configuration without showing gain difference (the appearance of the negative signal) the sequencing control will stop at the next position, thereby yielding an error signal.

1.4 Circuit operation (refer to Appendix III, Electrical Schematic Automatic Lead Selector (A100), F8625378)

a. Unknown transistor leads, X, Y, and Z (V and W for diodes) are brought from the test socket through normally closed contacts on relays K106, K107 and K108 respectively to wipers A, B and C of the stepping switch K102. K102 is connected to home to position 10 and to leave that position and start sequencing, when the test switch is closed. When K102 is in Position 1, B and C wipers (Y & Z leads) are connected together and to a source of AC voltage. Wiper A is connected to the input of a conduction sensing amplifier made up of Q103. If non-linear conduction occurs in a negative resultant polarity the output of the amplifier will close K103, the germanium-silicon relay. Relay K103 is provided a hold contact. In the case of no non-linear conduction, the amplifier output is at -30 volts and K103 will not operate. Position 2 of K102 reverses the test connection and repeats the same test. If non-linear conduction has been sensed in either step 1 or 2, the transistor is assumed to be germanium, K103 is closed and K103 contacts supply -0.7 volts to the base finding circuits. If no conduction has been sensed in steps 1 and 2 the unknown

transistor is assumed to be silicon, K103 is not operated and its contacts supply -1.4 volts to the base finding circuits.

b. In position 3 of K102 wipers B and C are tied together and to contacts of relay K104 (the NPN-PNP relay), wiper A is connected directly to the K104 contact. K104 is controlled by the automatic NPN-PNP circuit or an override is provided by a hole on the punched card to be operated for NPN transistors, and not operated for PNP types. When K104 is not operated (PNP) wiper A is connected to the conduction sensing amplifier and the B-C pair to the test voltage (-0.7 or -1.4V as selected above). The polarity of this connection would be reversed for NPN transistors by K104. Output of the conduction (base) sensing amplifier (Q101-Q102) is connected through wiper D of K102 to the coil of K106 one of the three base relays. The circuit set up as described will examine lead X to see if it is a base. If "X" is not a base, the base sensing amplifier will sense conduction, its output will be low and K106 will not operate. If "X" is a base, no conduction will take place; the amplifier output will approach -30 volts and K106 will operate and hold in the operated position. Operation of K106 removes the base (X) from its wiper (A) of K102 and connects it through relay K107 contacts to the input of the conduction sensing amplifier for further tests. Other K106 contacts activate signals that say a base has been found and set the alarm circuit ready to detect any operation of the other two base relays K107 or K108 (other base or open circuit detections). A set of contacts is used to close the 2.5V AC circuit to enable emitter finding in later steps.

c. Positions 4 and 5 of K102 interrogate Y and Z respectively for conduction precisely as described above operating relays K107 and K108 in the case of non-conduction.

d. A SHORT detector line connects -30 volts through a series configuration of contacts of K106, K107 and K108 so that if no base is found (K106, K107, K108 all not operated) this line will be hot. Other K106, K107 and K108 contacts are interconnected so that if more than one case of non-conduction is found, all three relays operate; this combination also puts -30 volts on the open line.

e. Position 6 of K102 initiates the emitter finding procedure, first by operating K109, the memory relay, by applying -30 volts through wiper D to K109 which then holds in the operated position. K109 contacts transfer the base from the base finder circuits to the collector finding circuits, through K110 contacts, they also connect the SHORT line to the SHORT and "No-Go" Indicator so if a base has not been found a SHORT will be indicated. Another K109 contact removes the ground through a non-operated K110 contact to the input of the emitter finding circuit (found at R113) and also through K105 (the transistor-diode relay) to wiper F of K102 to ground the base (cathode) finding action in position 5 during diode tests.

f. When the base was correctly found, either K106, K107 or K108 operated and applied 2.5V AC through K104 (NPN-PNP) contacts in the correct polarity to form a simple transistor amplifier with the known base and one choice of the remaining leads as collector and emitter, this latter choice made by the A-B-C wipers of K102. If the lead configuration

is correct, a negative going signal will appear at the base of Q105 causing K110 to operate. Operation of K110 simultaneously stops the stepping of K102 and transfers the correctly found leads into the rest of the tester through K111, the LEADS KNOWN-UNKNOWN relay. If the configuration of unknown leads is not correct K110 will not operate and K102 is free to step to Position 7 and check for emitter, then to position 8 and complete checking for all possible correct lead orientations. When the leads have been correctly identified, K110 will operate and K102 will stop, the correct connections having been made to the rest of the tester through K111 and a circuit grounded through a K110 contact to enable the main tester program to continue.

g. After the successful completion of a test the reset contacts open (shown as a pushbutton S1302 on the schematic) opening the -30 volts to the relay hold circuits, all relays deactivate and when 30 volts is re-established K102 steps to Position 10, its normal home position and the process is ready to be reinitiated.

h. If a fault has occurred, relay K110 will not operate since if the base has not been correctly found the emitter finding circuit is not completely activated and if a correct base is found but no emitter can be identified, K110 will also receive no closing signal. When K110 does not operate, K102 continues stepping to Position 9 where the hold voltage of relay K109 is passed back through wiper E of K102 to Position 9 then through the closed contacts of the RESET switch and is used as an inhibit voltage to prevent the operation of K101 and consequently K102 itself. When K102 is stopped in Position 9, wiper E of K102 is also employed to put -30 volts

on the NO-GAIN line signalling a fault to the NO-GO circuit. Note that the operation of the reset contacts removes the inhibit and allows K101 to operate sending K102 to Position 10 at the end of an unsuccessful test.

i. Actual stepping of K102 is accomplished by an auxiliary relay K101 which is operated by the charging and discharging of C102. K101 can be stopped by the operation of K110 which removes the ground or the presence of an inhibit signal at the junction of its coil and R107 (produced by K102 Position 9, if K110 is not operated). The voltage which K101 supplies to K102 coil is -30 volts from the capacitor C102. This connection allows K102 to be operated by K101 up to Position 10 of K102, when the off normal contact opens and the device is in a standby condition. A new test routine is started by shorting across the off normal switch with a test initiate signal.

1.5 In-circuit operation (refer to Appendix III Electrical Schematic, Automatic Lead Selector A100, F8625378

a. When an in-circuit transistor or diode is to be tested, its leads will be connected to clips on the remote probe assembly which, in turn, is connected to socket J104. Out-of-circuit transistors will be put into test socket J103. Both of these sockets are mounted on the front panel of the tester along with the diode test clips J101 and J102. As in the out-of-circuit test they are connected to contacts A, B, and C of the stepping switch, K102, through normally closed contact on relays K106, K107, and K108, respectively.

b. Pushing the RESET button, S1302 returns the stepping switch to position 10. This is its home, or starting, position.

c. The test sequence of the stepping switch begins when the TEST button is pressed. Positions 1 and 2, in conjunction with transistor Q103 and relay K103, determine whether the transistor under test is a germanium or silicon type. If the transistor is a germanium type, relay K103 is energized and -0.7 volt is applied to the base-finding circuits through the contacts of relay K103. If K103 is not energized by transistor Q103 in position 1 or 2 of the stepping switch, the transistor under test is assumed to be a silicon type. This means that -1.4 volts will be applied to the base-finding circuits through the contacts of de-energized relay K103.

d. The base-finding circuitry is associated with positions 3, 4 and 5 of stepping switch K102. Through these positions, relays K106, K107 or K108 will be energized by transistors Q101 and Q102, depending upon whether the base lead of the transistor has been put into recess X, Y, or Z of test socket J103 or connected to 1, 3, or 5 of the remote probe assembly socket. The NPN-PNP relay, K104 automatically or by program determines the polarity of test voltages during the base-finding operation. When relay K106, K107, or K108 is energized by the location of the base lead, the test socket position to which this lead is connected is transferred to a contact of relay K109. Opens or shorts are discovered during the three base-finding steps and are indicated by the appropriate light. Lighting of the OPEN indicator may mean that the NPN-PNP switch is set to the wrong position if the transistor polarity type is unknown.

e. Positions 6, 7, and 8 of the stepping switch complete the connections for circuitry used in the gain test. This circuitry consists of relay K110

and transistor Q104. Test voltage polarity depends on the setting of the NPN-PNP relay. Transistor Q104 is a sensing amplifier that will switch to a conducting state if the transistor under test has sufficiently higher forward gain than reverse gain. Transistor Q104 energizes relay K110, which stops the test and lights the GO indicator. If the transistor under test does not have a sufficient difference between forward and reverse gain to switch Q104, relay K110 will not be energized and the stepping switch will progress to position 9. This action lights the NO GAIN indicator. In this module, lighting of the NO GAIN indicator is a general indication, because the fault could actually be very low gain or an immeasurable difference between forward and reverse gain (beta) or it could be an emitter to collector short. At any rate, the transistor would be unusable for most purposes and the NO GAIN indication contributes to simplicity of operation.

f. Regardless of the position in which the stepping switch stops, it may be returned to position 10, its home position, by pushing the RESET button. This action de-energizes all relays, turns off all test indicators, and lights the READY lamp.

g. When an in-circuit transistor is being tested, the CIRC. IMP. HI-LO switch, S101, properly connects the base-finding circuitry to change the sensitivity to 250 ohms for germanium and 470 ohms for silicon. All voltages must be removed from an in-circuit transistor before it is tested.

31 January 1963

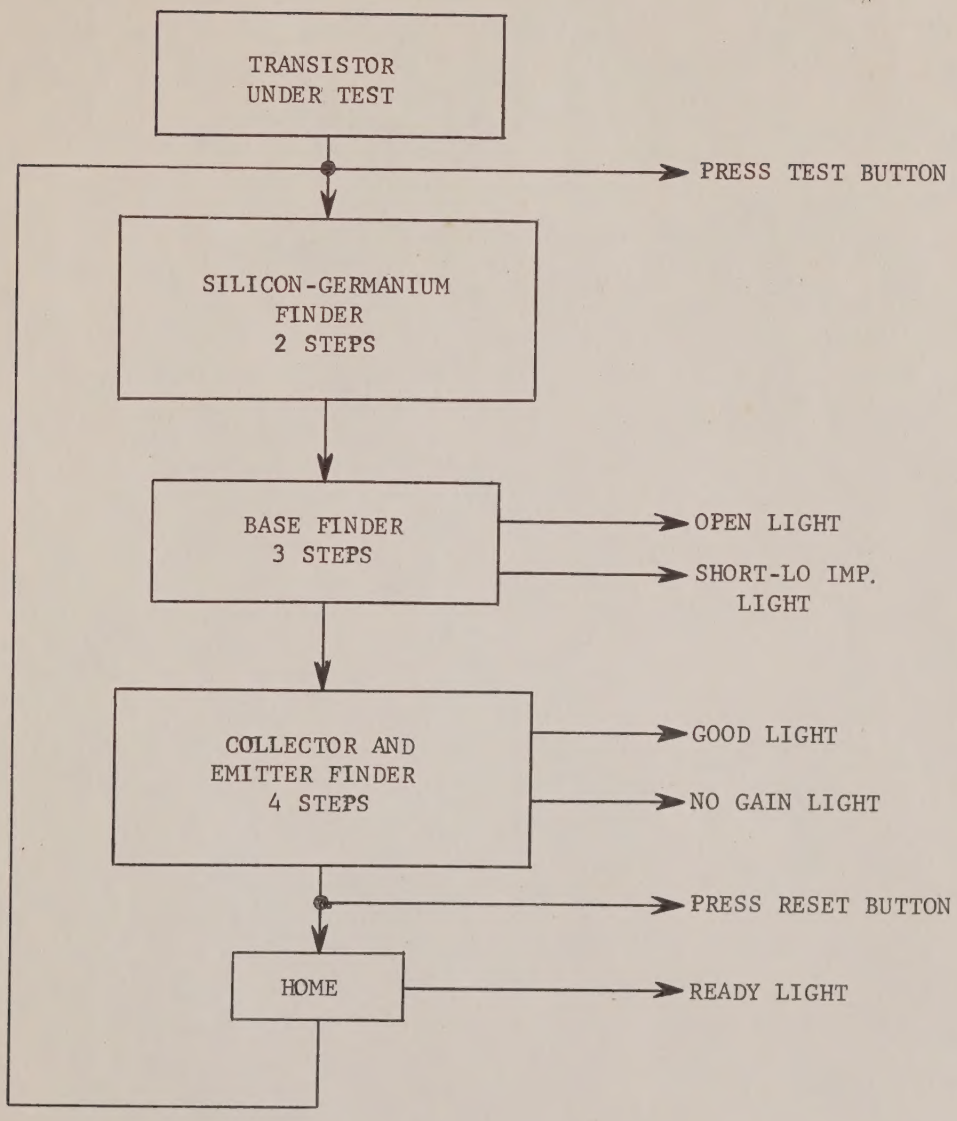

Automatic Lead Selector
In-Circuit Tester
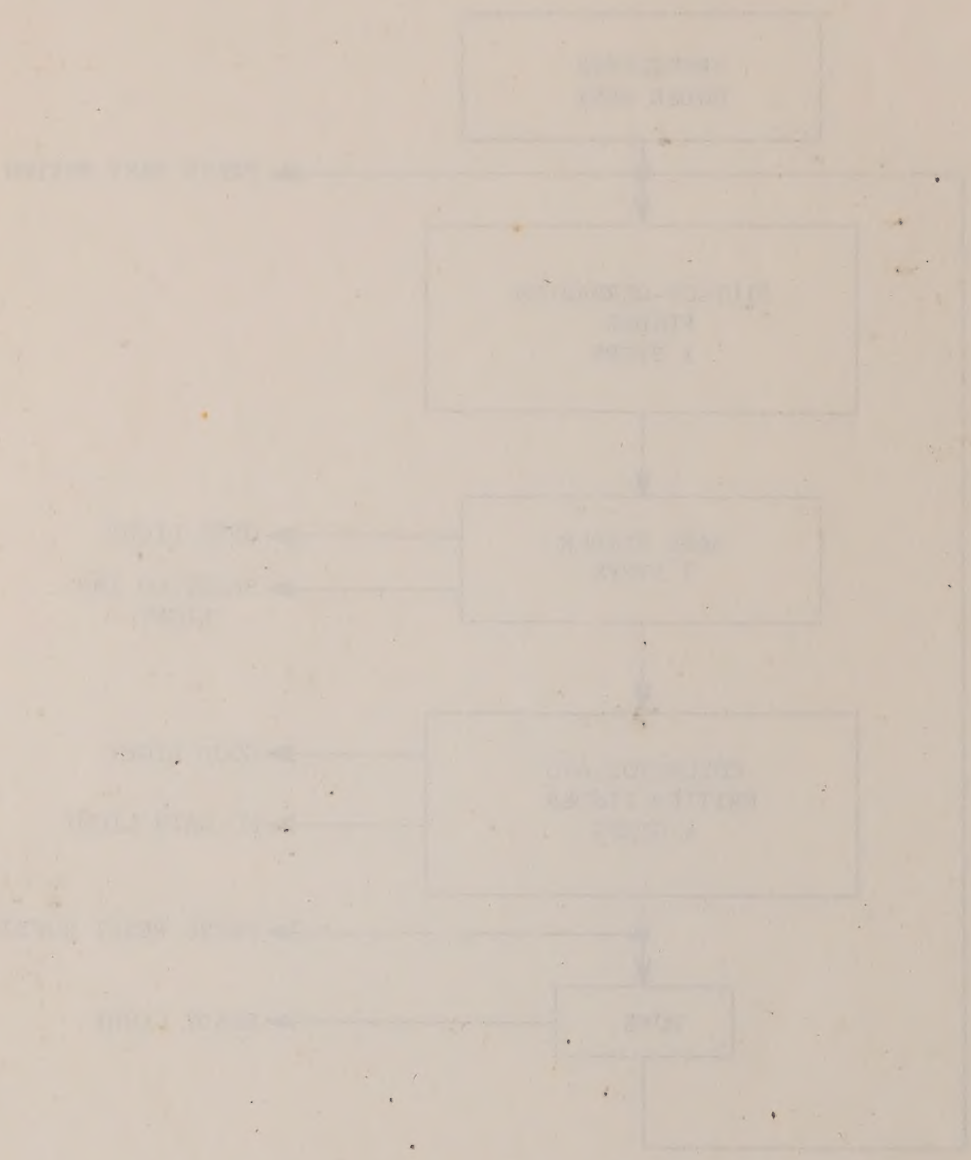
M8625349